LANDA®
PRESSURE WASHERS
PLATINUM SERIES

PHW
PHWS

OPERATOR'S MANUAL

- PHW2-1100
- PHW/PHWS3-1100
- PHW/PHWS4-2000
- PHW/PHWS4-3000
- PHWS5-3000

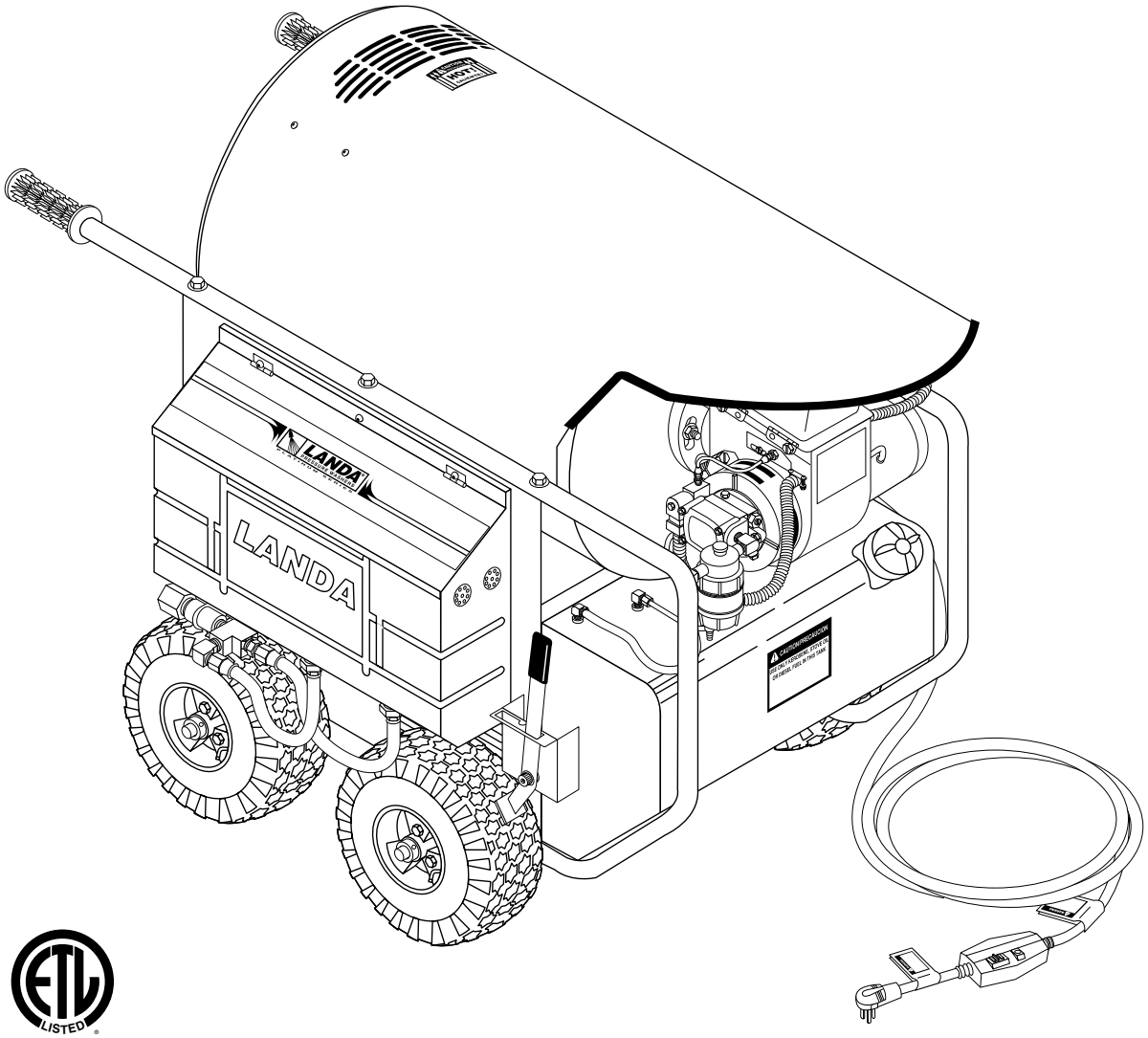

CONTENTS

Model Number _____

Serial Number _____

Date of Purchase _____

The model and serial numbers will be found on a decal attached to the pressure washer. You should record both serial number and date of purchase and keep in a safe place for future reference.

INTRODUCTION

Thank you for purchasing a Landa Pressure Washer.

This manual covers the operation and maintenance of the PHW2-11021D, PHW3-11025K, PHW4-30025N, PHW/PHWS3-11021D, PHW/PHWS4-20021A, PHW/PHWS4-20021B, PHW/PHWS4-20021C, PHW/PHWS4-20021G, PHW/PHWS4-20021H, PHW/PHWS4-20025K, PHW/PHWS4-20025N, PHW/PHWS4-20025P, PHW/PHWS4-30021A, PHW/PHWS4-30021B, PHW/PHWS4-30021C, PHW/PHWS4-30021F, PHW/PHWS4-30021G, PHW/PHWS4-30021H, PHWS430025N, PHWS5-30021B, PHWS5-30021C, PHWS5-30021F, PHW5-30021H and PHWS5-30025N washers. All information in this manual is based on the latest product information available at the time of printing.

Landa, Inc. reserves the right to make changes at any time without incurring any obligation.

The PHW/PHWS Series was designed for maximum use of 8 hours per day, 5 days per week.

Owner/User Responsibility:

The owner and/or user must have an understanding of the manufacturer's operating instructions and warnings before using this Landa pressure washer. Warning information should be emphasized and understood. If the operator is not fluent in English, the manufacturer's instructions and warnings shall be read to and discussed with the operator in the operator's native language by the purchaser/owner, making sure that the operator comprehends its contents.

Owner and/or user must study and maintain for future reference the manufacturers' instructions.

This manual should be considered a permanent part of the machine and should remain with it if machine is resold.

When ordering parts, please specify model and serial number.

UNPACKING

Carefully unpack your new *LANDA* washer and check contents against packing slip. Basic equipment with each machine includes:

1. Pressure washer assembly
2. High pressure discharge hose
3. Wand assembly
4. Spray gun on machines where applicable
5. Operator's manual

MACHINE SAFETY

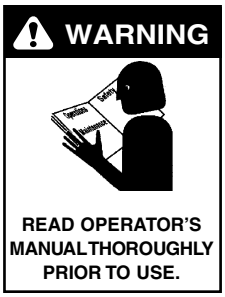

CAUTION: To reduce the risk of injury, read operating instructions carefully before using.

1. Read owner's manual thoroughly. Failure to follow instructions could cause malfunction of the machine and result in death, serious bodily injury and/or property damage.
2. All installations must comply with local codes. Contact your electrician, plumber, utility company or the selling distributor for specific details. To comply with the National Electrical Code (NFPA 70) and provide additional protection from risk of electric shock, this pressure washer is equipped with a UL approved ground fault circuit interrupter (GFCI) power cord (250V 30 amp or less, 1PH). All other models must be connected to a GFCI circuit breaker by a qualified electrician.

WARNING: Do not use gasoline, crankcase drainings or oil containing gasoline, solvents or alcohol. Doing so will result in fire and/or explosion.

WARNING: Risk of explosion-do not spray flammable liquids.

3. In oil burning models, use only kerosene, No. 1 home heating fuel, or diesel. If diesel is used, add a soot remover to every tankful.

WARNING: Risk of asphyxiation. Use this product only in a well ventilated area.

4. Avoid installing machines in small areas or near exhaust fans. Adequate oxygen is needed for combustion or dangerous carbon monoxide will result.

WARNING: Risk of fire. Do not add fuel when machine is operating or still hot.

5. Turn machine off before refueling. Fire and/or explosion may occur if this is not done. Refuel in a well ventilated area.

WARNING: Keep water spray away from electric wiring or fatal electric shock may result. Read warning tag on electrical cord.

6. To protect the operator from electrical shock, the machine must be electrically grounded. It is the responsibility of the owner to connect this machine to a UL grounded receptacle of proper voltage and amperage ratings. Do not spray water on or near electrical components. Do not touch machine with wet hands or while standing in water. Always disconnect power before servicing.

CAUTION: Spray gun kicks back -- hold with both hands.

7. Grip cleaning wand securely with both hands before starting the cleaner. Failure to do this could result in injury from a whipping wand.

WARNING: Flammable liquids can create fumes which can ignite causing property damage or severe injury.

8. Oil burning appliances shall be installed only in locations where combustible dusts and flammable gases or vapors are not present. Do not store or use gasoline near this machine.

WARNING: High pressure stream of fluid that this equipment can produce can pierce skin and its underlying tissues, leading to serious injury and possible amputation.

9. High pressure developed by these machines will cause personal injury or equipment damage. Use caution when operating. Do not direct discharge stream at people, or severe injury or death will result.
10. Never make adjustments on machine while it is in operation.

WARNING: High pressure spray can cause paint chips or other particles to become airborne and fly at high speeds.

11. Eye safety devices, foot protection and other protective clothing must be worn when using this equipment.
12. The spray gun should not be operated with the trigger in the off position for extensive periods of time as this may cause damage to the pump. Check to make sure burner shuts off with spray gun closed.
13. Protect from freezing.
14. Protect discharge hose from vehicle traffic and sharp objects.
15. To prevent serious injury, be certain quick coupler on discharge hose has locked before using pressure washer.
16. Before disconnecting discharge hose from hot water outlet, turn off burner and open spray gun to allow water to cool to 100°, then turn off pump motor and water supply and open spray gun to relieve back pressure in hose. This will prevent coil damage from thermal expansion.
17. Do not allow acids, caustic or abrasive fluids to pass through the pump.
18. Inlet supply water must be cold and clean fresh water.
19. The best insurance against an accident is precaution and knowledge of the machine.
20. *LANDA* will not be liable for any changes made to our standard machines or any components not purchased from *LANDA*.
21. Do not allow children to operate the pressure washer at any time. **This machine must be attended during operation.**
22. Do not overreach or stand on unstable support. Keep good footing and balance at all times.
23. Follow the maintenance instructions specified in the manual.
24. Do not operate this product when fatigued or under the influence of alcohol or drugs. Keep operating area clear of all persons.

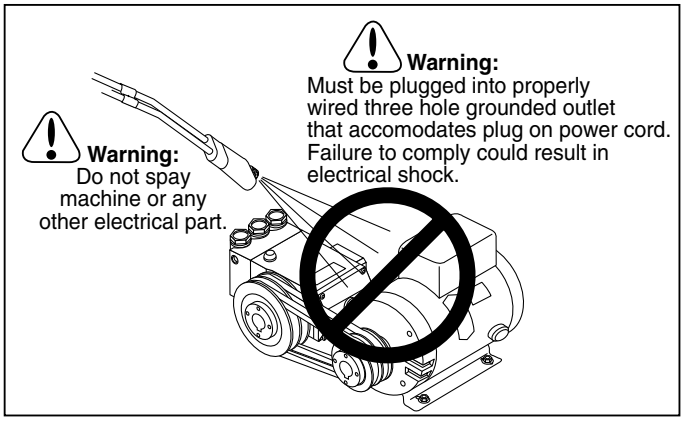

COMPONENT IDENTIFICATION

ALL MODELS

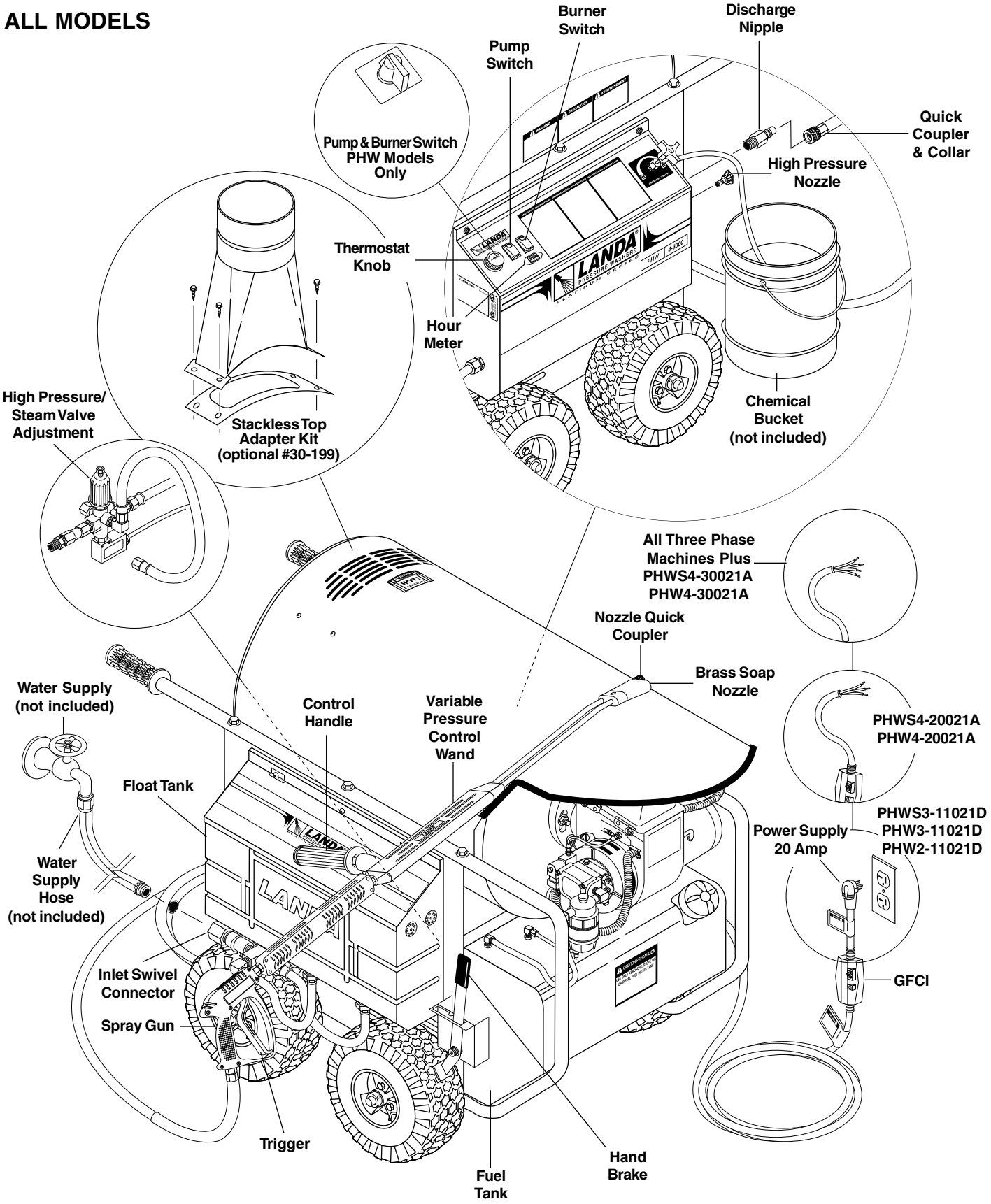

PRE-OPERATION CHECK

- ❑ Check pump oil level. (Use SAE 30W non-detergent oil). Dipstick is located on top of pump.
- ❑ Cold water supply (minimum 6 gpm, 5/8", 20 psi)
- ❑ Hose, wand, nozzle (nozzle size per serial plate)
- ❑ Water filter (intact, non restrictive)
- ❑ Open spray gun to relieve pressure before starting.

SET-UP PROCEDURES

These machines are intended for indoor use. Machines must be stored indoors when not in use.

- ❑ Location of machine is important. Avoid installing near combustible material or in poorly ventilated areas.
- ❑ Electrical connection to machine should be the proper voltage, phase and amperage. See specifications for particular model. Plug the power cord into a **grounded receptacle**. The PHW2-11021D, PHW3-11021D and PHWS3-11021D each require a 20 amp receptacle to comply with UL 1776 standards.
- ❑ Water source for machines should be supplied by a 5/8" I.D. garden hose with a city water pressure of not less than 30 PSI. If the water supply is inadequate, or if the garden hose is kinked, the machine will run very rough and the burner will not fire.
- ❑ Fill fuel tank with proper fuel.
- ❑ Adding exhaust vent pipe to your oil fired burner is not recommended because it restricts air flow. This causes carbon build-up, which affects the operation and increases maintenance on the coil. If a stack must be used, refrain from using 90 degree bends. If the pipe can not go straight up then use only 45 degree bends and go to the next larger size pipe. The overall pipe length must not exceed 6 feet in length

OPERATING INSTRUCTIONS

- ❑ Read safety, installation and preventative maintenance instructions before starting machine.
- ❑ Connect the water supply hose to the float tank inlet swivel connector and turn on water supply.
- ❑ Check fuel tank level.
- ❑ Connect the high pressure hose quick coupler to discharge nipple by sliding the quick coupler collar back and inserting quick coupler on coupler nipple and pushing the quick coupler collar forward to secure it.
- ❑ Connect the wand, nozzle, hose and spray gun (where applicable). Use teflon tape on pipe thread connections to avoid water leaks (see component identification).
- ❑ Plug the power cord into the proper power supply. (Refer to serial plate for information.)
- ❑ Grip spray gun and wand handle securely.
- ❑ On PHW models, turn the pump and burner switch to the pump position.

  On PHWS models, turn the pump and burner switch ON and then pull the trigger on the spray gun to activate a pressure switch which will then start the machine.

  When a steady stream of water flows from the spray gun and wand, turn the thermostat knob to the 200° mark, then push the burner switch (PHWS models) or turn the pump and burner switch (PHW models) to the burner position. The burner will light automatically when the spray gun trigger is pulled. On the PHWS models, the ignition light should be illuminated.
- ❑ Turn the variable pressure control handle clockwise to increase pressure.
- ❑ Place chemical hose into chemical container and open chemical valve. NOTE**:** Do not run this machine more than five minutes with spray gun closed. When spray gun is closed more than two minutes, the pump protector on PHW models will open to allow hot water to dump on the ground; thus allowing cold water to reenter the pump. On PHWS models, a time delay feature will shut the machine off.

SHUT DOWN PROCEDURES

- ❑ Place chemical line in a bucket of water allowing chemical to be flushed from system. Then turn chemical valve off.
- ❑ Push burner switch off or turn switch to pump position and open trigger on spray gun, allowing water to flow, which will cool down the heating coil.
- ❑ After water has cooled, turn the pump and burner switch to the OFF position (PHW models). On PHWS models, release the trigger on the spray gun which will activate a timer to shut the machine off after one minute. On PHWS models, turn the pump switch off if the machine is going to be left unattended.
- ❑ Turn water off.
- ❑ Protect from freezing (see Winterizing Procedures).

GENERAL WASHING TECHNIQUES

This machine is equipped with a spray gun and various nozzle patterns, use the wide patterns on easy soil removal jobs and the narrow patterns on the more difficult jobs or tight areas such as cracks and holes.

In most cases, faster results and better chemical economy will be obtained by applying the chemical and letting it "set" for a few minutes, prior to rinsing. This enables it to do its soil penetrating and loosening work.

Most cleaning work terminates with a high pressure rinse as part of the normal cleaning procedure. In some cases, however, the last operation may be the application of a chemical or detergent (sanitizing, for example). After such work, run machine for 20 - 30 seconds to clear the pump and lines.

Do not run anything through this machine that will damage the steel heating coil and pump.

STEAM COMBINATION

- ❑ Open the pump access panel.
- ❑ Turn the steam valve counterclockwise lightly until you feel resistance. (Chemical will not siphon when the steam valve is opened.)
- ❑ Turn the thermostat knob to the 270° mark. (The thermostat is a high limit device and does not regulate temperature).
- ❑ To stop, reverse steps 1 to 3 and set all controls to their original settings.
- ❑ Turn burner switch off, open trigger on spray gun and allow water to cool.
- ❑ PHWS models have the steam mode built into the unloader. Just turn the unloader adjustment knob counterclockwise until you feel resistance.

PREVENTATIVE MAINTENANCE

- ❑ Use clean fuel - kerosene, No. 1 home heating fuel or diesel. Clean or replace fuel filter every 100 hours of operation. Avoid water contaminated fuel as it will seize up the fuel pump. De-soot coils monthly or use an additive if diesel is being used.
- ❑ Check to see that water pump is properly lubricated.
- ❑ Follow winterizing procedure to prevent freeze damage to pump and coils.
- ❑ Always flush chemicals from system after use.
- ❑ If water is known to be high in mineral content, use a water softener on your water system or use a *LANDA* recognized coil cleaning chemical.
- ❑ Do not allow acidic, caustic or abrasive fluids to be pumped through the system.
- ❑ Always use high grade quality *LANDA* cleaning chemicals.
- ❑ Never run pump dry for extended periods of time.
- ❑ Periodically delime coils as per instructions.
- ❑ If machine is operated with smoky or eye-burning exhaust, coils will soot up and prevent water from reaching maximum operating temperature. See section on burner adjustments.

MAINTENANCE AND SERVICE

Pump Lubrication:

Use only *LANDA* SAE 30 weight, non-detergent oil. Change oil after first 50 hours of use. Thereafter, change oil every three months or at 500 hour intervals. Oil level should be checked through use of dipstick found on top of pump or red dot visible through oil gauge window. Oil should be maintained at that level.

Fuel:

Use clean (not contaminated with water and debris) kerosene, No. 1 home heating fuel or diesel. Drain fuel tank and replace fuel filter every 100 hours of operation.

Electrode Setting:

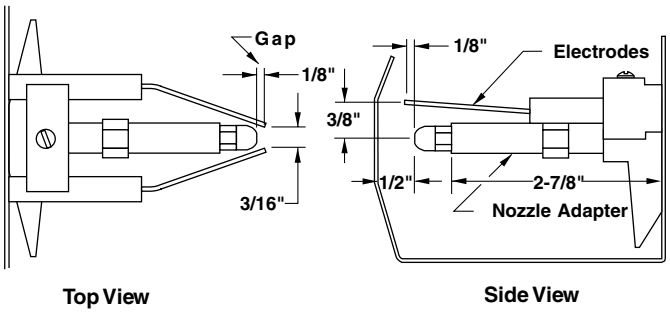

Periodically Check Wiring Connections. If Necessary To Adjust Electrodes, Use Diagram

Ignition Circuit:

Periodically inspect wires, spring contact and electrodes for condition, security and proper spacing. Transformer test: **CAUTION:** 10,000 volts -- use defect free insulated screwdriver and keep fingers off blade! Lay blade across one contact: OK if arc will span 1/2" between end of blade and other contact (see illustration).

Transformer Check:

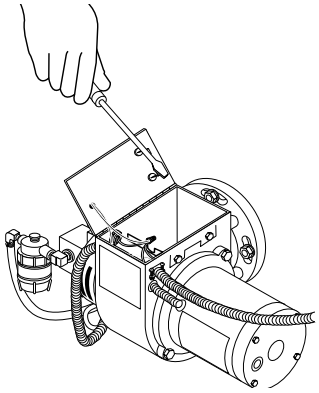

Fuel Control System:

These machines utilize a fuel solenoid valve located on the fuel pump to control the flow of fuel to the combustion chamber. This solenoid, which is normally closed, is activated by the unloader's pressure switch. When an operator releases the trigger on the spray gun, the unloader goes into a by-pass mode, thus stopping electrical current to the fuel solenoid coil. With the solenoid closed, the fuel supply to the combustion chamber ceases. Periodic inspection to insure that the fuel solenoid valve functions properly is recommended. This can be done by operating the machine and checking to see that when the spray gun is in the off position, the burner is not firing.

Fuel Pressure Adjustment:

To adjust fuel pressure, turn the adjusting screw clockwise to increase, counterclockwise to decrease. Do not exceed 200 PSI. **NOTE:** When changing fuel pump, a by-pass plug must be installed in return line port or fuel pump will not prime. (See illustration below.)

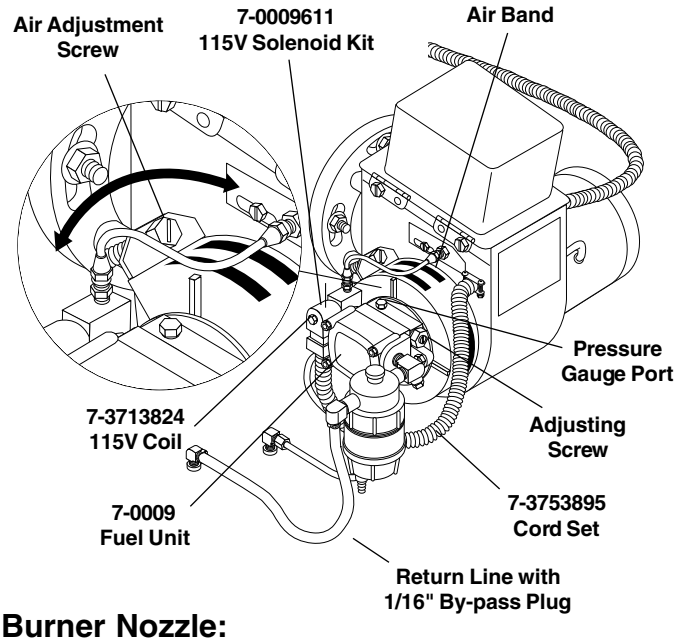

Burner Nozzle:

Keep tip free of surface deposits by wiping with clean, solvent-saturated cloth, being careful not to plug or enlarge nozzle. For maximum efficiency, replace nozzle each season.

Air Adjustment:

Machines are preset and performance tested at the factory elevation of 100'. A onetime initial correction for your location will pay off in economy, performance and extended service life. If a smoky or eye-burning exhaust is being emitted from the stack, two things should be checked. First, check the fuel to be certain that kerosene or No.1 home heating fuel is being used. Next, check the air adjustment on the burner. An oily, smoky fire indicates a lack of air and the air band should be moved to allow the air to flow through the burner. Sharp eye-burning fumes indicate too much air flowing through the combustion chamber. The air band should be readjusted to allow less air to flow through the burner.

Cleaning of Coils:

In alkaline water areas lime deposits can accumulate rapidly inside the coil pipes. This growth is increased by the extreme heat buildup in the coil. In areas where alkaline water is an extreme problem, periodic use of *LANDA* Deliming Powder will remove lime and other deposits before coil becomes plugged. (See Deliming instructions for use of *LANDA* Deliming Powder).

Deliming Coils:

Periodic flushing of coils is recommended.

1. Fill the float tank with 4 gallons of water, then add 1 lb. of deliming powder. Mix thoroughly.
2. Remove nozzle from wand assembly and put spray gun and wand assembly into float tank. Attach a nylon stocking to the end of the wand to collect debris.
3. Turn pump switch on, allowing solution to be pumped through coils and back into the float tank. Solution should be allowed to circulate 2 - 4 hours.
4. After circulating solution, clean and drain float tank and flush entire system with fresh water. Replace nozzle in wand.

Spray Nozzles:

Each machine is equipped with one spray nozzle. Different spray nozzles are calibrated for each machine depending on the flow and pressure of that particular model. Spray nozzles vary in bore size and angle of spray. Popular spray angles are 0°, 15°, 25° and 40°. When ordering, please specify size and angle of nozzle. Nozzle size for each machine is located on the serial plate.

Unloader Valves:

Unloader valves are preset and tested at the factory before shipping. Occasional adjustment of unloader may be necessary to maintain correct pressure. (See section in manual and consult your local *LANDA* Dealer for the correct procedures in adjusting the unloader valve.)

Winterizing Procedure:

Damage due to freezing is not covered by warranty. Adhere to the following cold weather procedures whenever the washer must be stored or operated outdoors under freezing conditions.

During the winter months, when temperatures drop below 32° F, protecting your machine against freezing is necessary. Siphoning a small amount of antifreeze into the system is recommended. This is done by pouring a 50/50 mix of antifreeze and water into the float tank and then siphoning 100% antifreeze through the chemical line with the pump on. If compressed air is available, an air fitting can be screwed into the float tank strainer fitting and, by injecting compressed air, all water will be blown out of the system.

Low Pressure Diagnosis:

Refer to the low pressure section of the troubleshooting guide. If, by referring to the guide, the trouble is found to be either the unloader or pump, your next step is to determine which is the problem. This can be done by eliminating the unloader from the system and attaching the discharge hose directly to the pump. If high pressure is present, then the unloader needs repairing.

CAUTION: WHEN USING THIS PROCEDURE TO TEST COMPONENTS, KEEP SPRAY GUN OPEN AT ALL TIMES.

Coil Removal:

Removal of the coil because of freeze breakage or to clean soot from it, can be done quickly and easily.

1. Disconnect hose from pump/unloader to inlet side of coil.
2. Disconnect the electrical connections to the thermostat or remove thermostat sensor.
3. Remove all the fittings from the discharge and inlet side of the coil.
4. Remove the burner assembly from the combustion chamber.
5. Remove 3 - 3/8" bolts from either side of coil and tank assembly (these bolts are used to fasten tank and handles to chassis).
6. Remove the two 3/8" nuts which are underneath the bottom wrap (to keep the coil from moving).
7. Remove tank top wrap exposing insulation and coil. Carefully bend insulation tabs at exhaust stack.
8. Carefully fold back the insulation and remove the coil.
9. Replace or repair any insulation found to be torn or broken.
10. Reinstall new or cleaned coil by reversing steps 8 through 1.

Temperature and Pressure Relief Valve:

(Pump Protector)

Machines with spray gun control offer the operator the convenience of stopping and starting the flow of water at the end of the discharge hose. When the spray gun stops the flow of water, the unloader valve, back at the machine, opens and recycles the cold water back to the inlet side of the pump. Recycling for longer than five minutes causes the cold water within the pump to heat up. To avoid damage to the pump, a temperature and pressure relief valve is installed next to the inlet side of the pump that will open in the event the water temperature exceeds 140° F. Therefore, while operating the machine, do not leave the spray gun closed for an extended period of time.

High Limit Hot Water Thermostat:

For safety, PHW machines are equipped with a high limit snap switch and PHWS machines are equipped with adjustable thermostats. In the event the temperature of the water should exceed its operating temperature, the high limit snap switch or adjustable thermostat will turn the burner off until the water cools, then it will automatically reset itself.

Rupture Disk:

If pressure from pump or thermal expansion should exceed safe limits, the rupture disk will burst, allowing high pressure to be discharged through hose to ground. When the disk ruptures, it will need to be replaced. Torque replacement disk to 35 lbs.

AUTO START / STOP TIMER OPERATION

Once the pump switch is turned on, simply triggering the spray gun is all it takes to start the machine. Once the trigger is released the timer will let the machine bypass water for 15 seconds. It also starts an internal 5 to 60 minute lockout timer. This feature is totally adjustable by the operator by adjusting the knob at the top of the timer. We recommend setting the timer for 15 minutes. To reset the lockout feature, operator must trigger the spray for 10 full seconds.

TROUBLESHOOTING

To by-pass unloader pressure switch, remove wires on *C* and *NO*, jumper same positions on timer.

To by-pass the timer, jumper wires on timer positions *C* and *6* together.

PHW/PHWS EXTERIOR VIEW

ALL MODELS

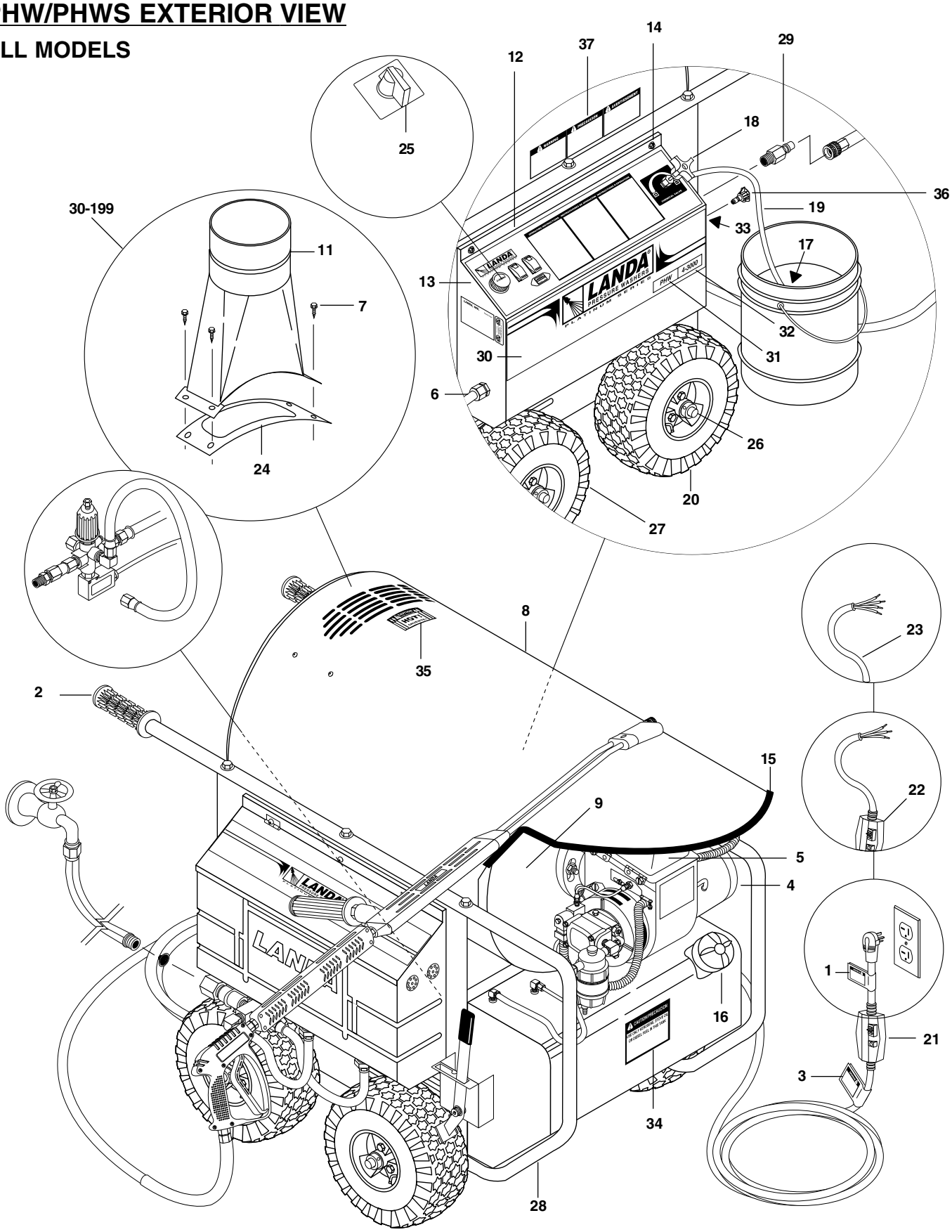

PHW/PHWS EXTERIOR VIEW

ALL MODELS PARTS LIST

ITEM	PART NO.	DESCRIPTION	QTY
1	10-080180	Label, Extension Cord, GFCI (2-1100, 3-1100)	1
2	2-01101	Grip, Handle (Waffle), 1"	2
3	10-08018	Label, Warning Service Cord	1
4	7-0005	Motor, 115V, 240V & Cap Comb	1
5	7-20358	Transformer, Burner, 115V	1
	7-21153	Transformer, Burner, 240V	1
6	6-05152	Strain Relief, Plastic (2-1100, 3-1100)	1
	6-051595	Fitting, Strt, LQTITE (4-2000, 4-3000, 5-3000)	1
7	90-3003	Screw, 1/4" x 3/4", SS Tek (optional 30-199)	4
8	95-07121014S	Top Wrap, Stainless Steel	1
9	95-07121015	Wrap, Bottom, Stainless Steel	1
10	95-07121110	Handle "J", PHW	2
11	7-10049	Adapter, Flue, 8" Stackless Top (optional 30-199)	1
12	10-080221	Label, PHW Control Panel	1
	10-990581	Label, PHWS, Control Panel	1
13	95-07121024	Control Box, Series II	1
	2-01107	Weather-stripping /ft.	4
14	90-19942	Screw, 10/32" x 3/4", Hex Wash Slot	2
15	2-01104	Trim, 1/16" Black, 750B-2 /ft.	2
16	2-01157	Cap, PHW, w/ Fuel Gauge, 14"	1
17	2-1905	▲ Strainer, 1/4" w/ Check Valve	1
18	2-3015	Valve Control, Metering	1
19	4-02080000	Tube, 1/4" x 1/2", Clear Vinyl /ft.	8
20	4-0303	Wheel & Tire Assy, 4" (PHW)	4
	4-0304	Wheel & Tire Assy, Complete 4" Mag (PHWS only)	4
21	6-01060	Cord, w/ GFCI Plug, 120V 20A, 36 ft. (2-1100, 3-1100)	1
22	6-01059	Cord, w/ GFCI 240V, 30A, 36 ft. (4-2000A, G)	1
23	6-0105	Cord, Service, SEO, 10/4 /ft. (4-2000B, H, 4-2000C/N/P, 4-3000C/F/N, 5-3000C/F/N)	36
23	6-0109	Cord, Service, SEO 10/4 /ft. (4-3000B, H, 5-3000B, H)	36
	6-0102	Cord, Service, SO, 8/3 /ft (4-3000A, G)	36
	6-0104	Cord, Service, SOWA, 12/3 (4-2000K)	36
24	7-01471	Insulation Gasket, Stackless Top (optional 30-199)	1
25	6-020201	Switch, 3 Pos, 115V-230V, 1 PH (PHW2-1100, 3-1100, 4-2000, 4-3000)	1
	6-020203	Switch, 3 Pos, 230V-460V, 3 PH (PHW4-2000, 4-3000)	1
26	90-20041	Collar, 5/8" Bore Shaft, 3010	4
27	95-07101012	Axle, 27", PHW	2
	95-07101012A	Axle, 28.5", PHWS	2
28	95-07121010S	Chassis, All Models	1
29	2-2007	Nipple, 3/8" x 3/8" NPT ST Male	1
30	10-99056	Label, PHW/PHWS Plat. Series	1
31	10-020PHWS	Label, PHWS	1
	10-020PHW	Label, PHW	1
32	10-2021100	Label, 2-1100	1
	10-2031100	Label, 3-1100	1
	10-2042000	Label, 4-2000	1
	10-2043000	Label, 4-3000	1
	10-2053000	Label, 5-3000	1
33	2-0103	▲ Grommet, 1/8", Rubber	4
34	10-020110	Label, Use Only Kerosene	1
35	10-02025A	Label, "HOT" Warning Exhaust	1
36	4-12804000	Nozzle, SAQCMEG, 0004, Red (2-1100, 4-3000)	1
	4-12804015	Nozzle, SAQCMEG, 1504, Yellow (2-1100, 4-3000)	1
	4-12804025	Nozzle, SAQCMEG, 2504, Green (2-1100, 4-3000)	1
	4-12804040	Nozzle, SAQCMEG, 4004, White (2-1100, 4-3000)	1

PHW/PHWS EXTERIOR VIEW

ALL MODELS PARTS LIST CONTINUED

ITEM	PART NO.	DESCRIPTION	QTY
36	4-12804500	Nozzle, SAQCMEG, 00045, Red, (4-2000K)	1
	4-12804515	Nozzle, SAQCMEG, 15045, Yellow, (4-2000K)	1
	4-12804525	Nozzle, SAQCMEG, 25045, Green, (4-2000K)	1
	4-12804540	Nipple, SAQCMEG, 40045, White (4-2000K)	1
	4-12805000	Nipple, SAQCMEG, 0005, Red (4-2000N/P, 5-3000N)	1
	4-12805015	Nozzle, SAQCMEG, 1505, Yellow (4-2000N/P, 5-3000N)	1
	4-12805025	Nozzle, SAQCMEG, 2505, Green (4-2000N/P, 5-3000N)	1
	4-12805040	Nozzle, SAQCMEG, 4005, White (4-2000N/P, 5-3000N)	1
	4-12805500	Nozzle, SAQCMEG, 00055, Red (3-1100, 5-3000)	1
	4-12805515	Nozzle, SAQCMEG, 15055, Yellow (3-1100, 5-3000)	1
	4-12805525	Nozzle, SAQCMEG, 25055, Green (3-1100, 5-3000)	1
	4-12805540	Nozzle, SAQCMEG, 40055, White (3-1100, 5-3000)	1
	4-12806000	Nozzle, SAQCMEG, 0006, Red (4-2000)	1
	4-12806015	Nozzle, SAQCMEG, 1506, Yellow (4-2000)	1
	4-12806025	Nozzle, SAQCMEG, 2506, Green (4-2000)	1
	4-12806040	Nozzle, SAQCMEG, 4006, White (4-2000)	1
37	10-99083	Label, Warning, Hot Water	1

▲ Not Shown

PHW CONTROL PANEL

ALL MODELS

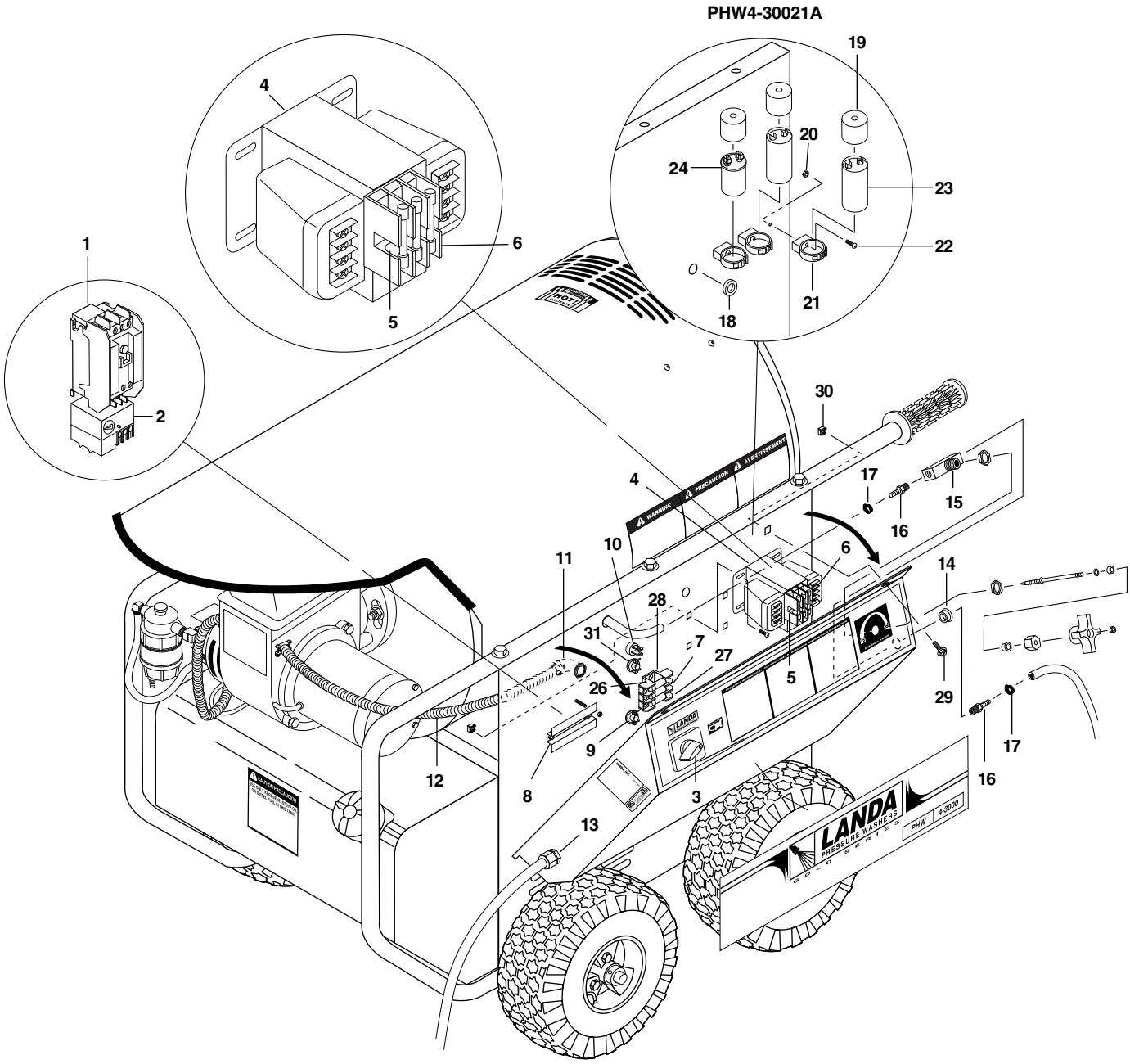

PHW CONTROL PANEL
ALL MODELS PARTS LIST

ITEM	PART NO.	DESCRIPTION	QTY
1	6-1205	Contactor, G.E. C-2000, CL00A310TJ (4-2000C)	1
	6-1209	Contractor, G.E. C-2000, CL01A310TJ (4-3000C/F/N)	1
	6-1212	Contactor, G.E. C-2000, CL02A310TJ (4-2000B, H)	1
	6-1215	Contactor, G.E. C-2000, CL25A310TJS (4-3000B, H)	1
	6-1221	Contactor, G.E. C-2000, CL06A311MJS (4-3000A, G)	1
2	6-1254	Overload, G.E. C-2000, RTA1N (4-2000C, 4-3000F)	1
	6-1255	Overload, G.E. C-2000, RTA1P (4-3000C/N)	1
	6-1257	Overload, G.E. C-2000, RTA1S (4-2000B, H)	1
	6-1259	Overload, G.E. C-2000, RTA1U (4-3000B, H)	1
	6-1262	Overload, G.E. C-2000, RTA2E (4-3000A, G)	1
3	6-020201	Switch, 3 Pos, 115V-230V 1 PH	1
	6-020203	Switch, 3 Pos, 230V 3 PH	1
4	6-05223	Transformer, 240/480-120/240V, .500 KVA (4-2000C, 4-3000C)	1
	6-05224	Transformer, 208/120V, .500 KVA (4-3000N)	1
	6-05234	Transformer, 600V-120V, 1.00 KVA (4-3000F)	1
	6-052352	Transformer, 240/480-120V, .050 KVA/Glass (4-2000A/B, 4-3000A/B)	1
	6-05237	Transformer, 208V-120V, .075 KVA (4-2000G, H, 4-3000G, H)	1
5	6-02294	Fuse, ATMR, 1 Amp, 240V (4-2000A/B, 4-3000A/B)	2
6	6-02297	Fuse, GDL, 1/2 Amp, 120V (4-2000A/B, 4-3000A/B)	1

ITEM	PART NO.	DESCRIPTION	QTY
7	6-022911	Fuse, GDL, 8 Amp, Slow Blow	1
8	6-021595	Din Rail Track /inch	1
9	6-0517	Strain Relief, 3/4"	1
10	6-051597	Bushing, Terminal	1
11	6-0515	Connector, Flex, 90°, 3/8"	1
12	6-0122	Conduit, Flex, Alum, 3/8" /ft.	2
	6-01220	▲ Conduit, Bushing, Anti-Short	2
13	6-05152	Strain Relief, Plastic (2-1100, 3-1100)	1
	6-051595	Fitting, Strt, LQ Tite (4-2000, 4-3000)	1
14	2-01411	Bushing, 1", Snap	1
15	2-3015	Valve, Metering	1
16	2-1085	Hose Barb, 1/4" Barb x 1/4" ML Pipe	2
17	2-9000	Clamp, Screw, #4	2
18	2-0103	Grommet, 1/8", Rubber	1
19	2-01168	Cap, Rubber Capacitor	3
20	90-017	Nut, 10/32", Keps	3
21	2-0100193	Clamp, 2" Click	3
22	90-1999	Screw, 10/32"x3/4" BH SOC CS	3
23		Start Capacitor (4-3000A)	2
24		Run Capacitor (4-3000A)	1
26	6-03565	Fuse Block, (4-2000, 4-3000C/F/N)	1
27	6-02306	Fuses, 3 amp, 600V (4-2000, 4-3000C/F/N)	2
28	90-16	Screw, 8/32" x 3/4" (4-2000, 4-3000C/F)	1
	90-200490	Nut, 8/32" Keps (4-2000, 4-3000C, F)	1
29	90-19942	Screw, 10/32" x 3/4", Hex Wash Slot	2
30	90-2018	Nut, Cage, 10/32" x 16 ga.	2
31	6-0516	Strain Relief 1/2" Metal, Two Screw	1

▲ Not Shown

PHWS CONTROL PANEL

ALL MODELS

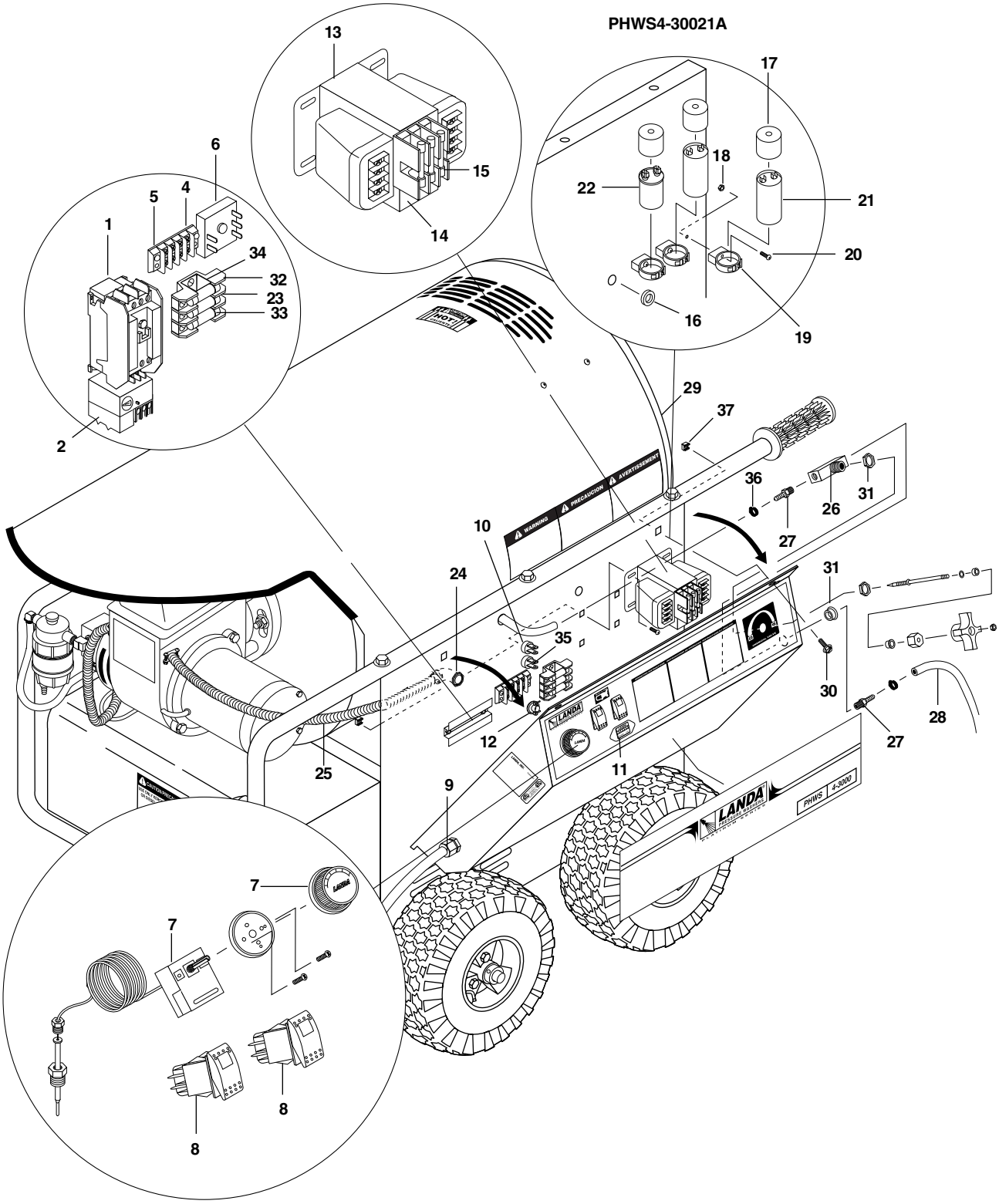

PHWS CONTROL PANEL

ALL MODELS PARTS LIST

ITEM	PART NO.	DESCRIPTION	QTY
1	6-1205	Contactor, G.E. C-2000, CL00A310TJ (4-2000C/N/P)	1
	6-1209	Contactor, G.E. C-2000, CL01A310TJ (4-3000F)	1
	6-1212	Contactor, G.E. C-2000, CL02A310TJ (4-2000B, 4-3000C/N, 5-3000C/F)	1
	6-1215	Contactor, G.E. C-2000 CL25A310TJS (5-3000N)	1
	6-1218	Contactor, G.E. C-2000, CL049A310MJ (3-1100D, 4-2000K 4-3000B/H, 5-3000B/H)	1
	6-1221	Contactor, G.E. C-2000, CL06A311MJS (4-2000A/G, 4-3000A/G)	1
2	6-1254	Overload, G.E. C-2000, RTA1N (4-2000C/N,P)	1
	6-1255	Overload, G.E. C-2000, RTA1P (4-3000F/N)	1
	6-1257	Overload, G.E. C-2000, RTA1S (4-3000C/N, 5-3000C/F)	1
	6-1258	Overload, G.E. C-2000, RTA1T (4-2000B/H)	1
	6-1259	Overload, G.E., C-2000 RTA1U (5-3000N)	1
	6-1260	Overload, G.E. C-2000, RTA1V (4-3000B/H, 5-3000B/H)	1
	6-1262	Overload, G.E. C-2000, RTA2E (4-3000A/G)	1
3	6-021595	Din Rail Track /inch	5
4	6-0504	Block, Strip, Terminal, 4-Poler	1
5	6-0505	Bar Jumper	1
6	6-03680	Timer, Solid State, 120V, 60 Sec	1
7	4-05088	Thermostat, Probe Style, 302°	1
	10-02033	Label, Thermostat w/ Numbers	1
8	6-02024	Switch, Rocker, Carling	2
9	6-05152	Strain, Plastic (3-1100)	1
	6-051595	Fitting, Strt, LQ Tite (4-2000, 4-3000, 5-3000)	1

ITEM	PART NO.	DESCRIPTION	QTY
10	6-051597	Bushing, Terminal	2
11	4-050822	Hour Meter, ENM T51E20-2, 115 Vac	1
12	6-0517	Strain Relief, 3/4"	1
13	6-05223	Transformer, 240/480-120/240V, .500 KVA (4-2000C, 4-3000C, 5-3000C)	1
	6-05224	Transformer, 208-120V .500 KVA (4-2000N, 4-3000N, 5-3000N)	1
	6-052241	Transformer 220/440V - 115V .500 KVA (4-2000P)	1
	6-05234	Transformer, 600V-120V, 1.00 KVA (4-3000F, 5-3000F)	1
	6-052352	Transformer, 240/480-120V, .050 KVA/Glass (4-2000A/B, 4-3000A/B, 5-3000B)	1
	6-05237	Transformer, 208V-120V, .075 KVA (4-2000G/H, 4-3000G/H, 5-3000H)	1
14	6-02294	Fuse, ATMR, 1 Amp, 240V (4-2000A/B,4-3000A/B,5-3000B)	2
15	6-02297	Fuse, GDL, 1/2 Amp, 120V (4-2000A/B,4-3000A/B,5-3000B)	1
16	2-0103	Grommet, 1/8, Rubber	1
17	2-01168	Cap, Rubber Capacitor	3
18	90-017	Nut, 10/32", Keps	3
19	2-010019	Clamp, 1-1/2" Click	3
20	90-1999	Screw, 10/32"x3/4" BH SOC CS	3
21		Start Capacitor (4-3000A)	2
22		Run Capacitor (4-3000A)	1
23	6-022911	Fuse, GDL, 8 Amp,Slow Blow (4-2000K/P, 4-3000C/F/N, 5-3000C/F/N)	1
24	6-0515	Connector, Flex, 90°, 3/8"	1
25	6-0122	Conduit, Flex, Alum, 3/8" /ft.	2
	6-01220	▲ Conduit, Bushing, Anti-Short	2
26	2-3015	Valve, Metering	1

PHWS CONTROL PANEL

ALL MODELS PARTS LIST

ITEM	PART NO.	DESCRIPTION	QTY
27	2-1085	Hose Barb, 1/4" Barb x 1/4" ML Pipe	2
28	4-02080000	Tube, 1/4" x 1/2", Clear Vinyl	/ft. 5
29	4-02090000	Tube, 1/4" x 1/2", Clear Vinyl	/ft. 3
30	90-19942	Screw, 10/32" x 3/4", Hex Wash Slot	2
31	2-01411	Bushing, 1" Snap	1
32	6-03565	Fuse Block (4-2000, 4-3000, 5-3000C/F)	1
33	6-02306	Fuses, 3 Amp, 600V (4-2000, 4-3000, 5-3000C/F)	2
34	90-16	Screw, 8/32" x 3/4" (4-2000, 4-3000, 5-3000C/F)	1
	90-200490	Nut, 8/32" Keps (4-2000, 4-3000, 5-3000C/F)	1
35	2-9000	Clamp, Screw #4	2
36	90-2018	Nut, Cage, 10/32" x 16 ga.	2

▲ Not Shown

PHW/PHWS TANK ASSEMBLY

ALL MODELS

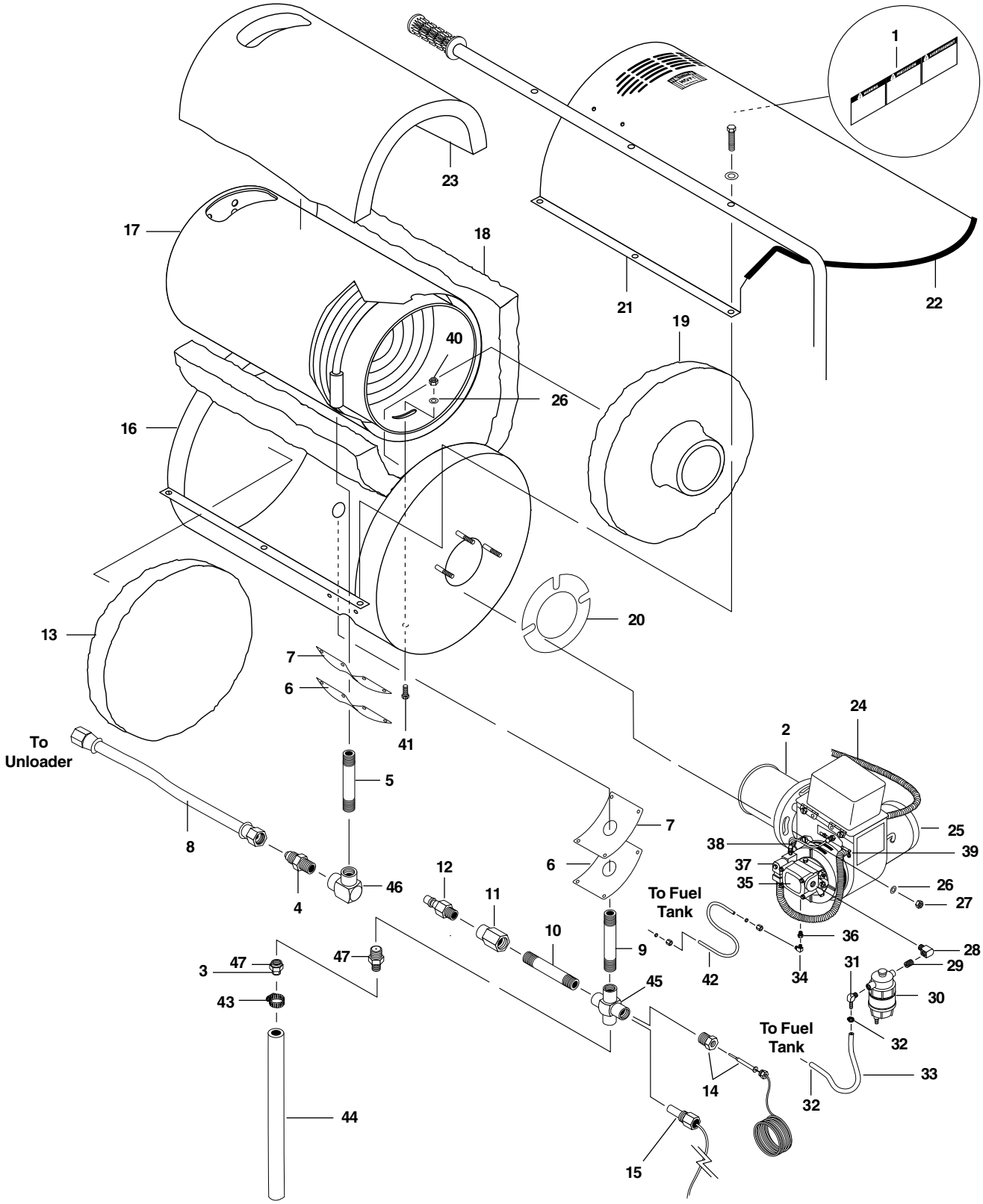

PHW/PHWS COMBUSTION ASSEMBLY

ALL MODELS PARTS LIST

ITEM	PART NO.	DESCRIPTION	QTY
1	10-99083	Label, Warning Hot Water	1
2	7-00033	Burner Assy, .021 (4-2000A/B, 4-3000A/B, 5-3000B)	1
	7-00034	Burner Assy, .023 (3-1100, 4-2000C/F, 4-3000C/F, 5-3000C/F)	1
	7-00035	Burner Assy, .025 (2-1100)	1
	7-00040	Burner Assy, EHASR, 220V 1PH, 50 Hz (3-1100K, 4-2000K)	1
	7-00042	Burner Assy, EHASR, 110V 1 PH, 50 Hz (4-2000N/P, 4-3000N, 5-3000N)	1
	7-0121	▲ Nozzle, Burner 1.00A 80° (2-1100)	1
	7-0123	▲ Nozzle, Burner 1.50A 80° (3-1100)	1
	7-0124	▲ Nozzle, Burner 1.75A 80° (4-3000)	1
	7-0126	▲ Nozzle, Burner 2.25A 80° (4-2000)	1
	7-0127	▲ Nozzle, Burner 2.50A 80° (5-3000)	1
3	2-3480	Replacement, Rupture Disk, 8000 psi (All models)	1
4	2-0052	Nipple, 1/2" JIC x 1/2" Pipe	1
5	2-0009	Nipple, Galv., 1/2" x 3"	1
6	95-07121113	PHW Insulation Retainer	2
7	7-0144	Gasket, Burner Plate	2
8	4-02047725	Hose, Pres. Loop, 100R2, 25"x3/8"	1
9	2-0010	Nipple, Galv., 1/2" x 4"	1
10	2-0012	Nipple, Galv., 1/2" x 5"	1
11	2-00241	Coupling, 1/2" x 3/8"	1
12	2-2007	Nipple, 3/8" x 3/8" NPT ST Male	1
13	7-0140	Insulation, Front Head, No Hole	1
14	4-05088	Thermostat, General, 302° (PHWS only)	1
15	4-05091	Switch, Snap, 275 Dr Hi-Limit (PHW only)	1
16	95-07121015	Bottom Wrap, Stainless Steel	1
17	95-07121212	Coil Replacement, Schedule 80 w/ Steel Wrap	1
18	7-01430	Insulation, Blanket w/ No Foil 24" x 57"	1
19	7-0141	Insulation, Burner Head, w/ Hole	1
20	7-12484	Gasket Standard - Large	2
21	95-07121014S	Top Wrap, Stainless Steel	1
22	2-01104	Trim, 1/16" Black, 750B-2 /ft.	3.25
23	7-01484	Insulation, Blanket - Die Cut, 28"	1
24	7-20358	Transformer, Burner, 115V	1
	7-20394	Transformer, 230V 50 Hz (4-2000N/P, 4-3000N, 5-3000N)	1
	7-21153	Transformer, Burner, 240V	1
25	7-0005	115/240V Burner Motor w/ Capacitor	1
	7-20388	Motor, Burner, 230V 50 Hz (4-2000N/P, 4-3000N, 5-3000N)	1
26	90-4002	Washer, Flat, SAE, 3/8"	5
27	90-2002	Nut, ESNA, NC, 3/8"	3
28	2-1022	Elbow, Street, 1/4"	1
29	2-1002	Nipple, Close, 1/4"	1
30	2-9905	Filter, Fuel Oil/H_2O Separator	1
	2-99051	Element, Fuel/H_2O Separator	1
31	2-1089	Hose Barb, 90°, 1/4" Barb x 1/4" Pipe	1
32	2-9000	▲ Clamp, Screw #4	2
33	4-02090000	Hose Braided Vinyl, 1/4"x1/2" /ft.	2
34	2-1116	Elbow, 1/4" Tube x 1/8" MPT, 90°	1
35	7-0009	Fuel Pump, 3450 RPM	1
36	2-1072	Bushing, 1/4" x 1/8" Pipe	1
37	7-0009611	Kit, Solenoid, 115V, New Style	1
38	7-0020	Fuel Line, Copper	1
39	6-0516	Strain Relief, 1/2"	1
40	90-20040	Nut, 3/8" Flange Whiz Loc	2
41	90-1018	Bolt, 3/8" x 1-1/2"	2
42	7-0149	Tubing, Copper /inch	12
43	2-90041	Screw Clamp, #16	1
44	4-02130050	Hose, 7/8" Push On /ft.	2
45	2-0039	Cross, 1/2" Female, Steel	1
46	2-0028	Elbow, 1/2" Female (PHWS)	1
47	2-3408	Rupture Disk Assy, 8000 psi (All models)	1

▲ Not Shown

PHW/PHWS CHASSIS

ALL MODELS

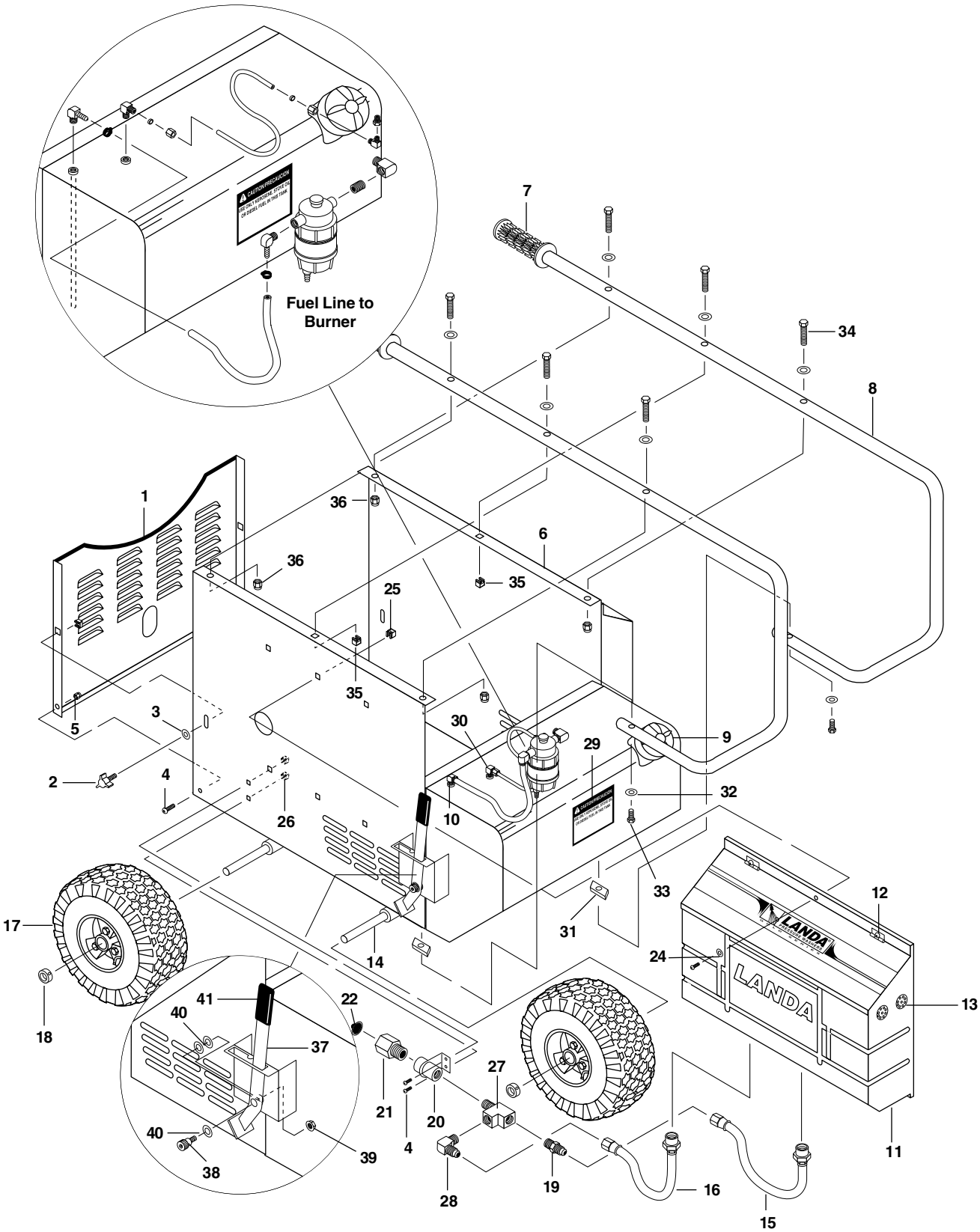

PHW/PHWS CHASSIS

ALL MODELS PARTS LIST

ITEM	PART NO.	DESCRIPTION	QTY
1	95-07121017	Panel, Rear Access	1
	10-02028	▲ Label, Warning - Exposed Pulleys	1
2	90-50031	Knob, Black 3 Pt, 5/16"-18 x 1"	2
	90-2023	▲ Nut, Cage, 5/16"-18, Black	2
3	90-4001	Washer, 5/16", Flat SAE	2
4	90-1995	Screw, 1/4" x 1/2", BH SOC CS	4
5	90-2000	Nut, 1/4", ESNA, NC	2
6	95-07121010S	Chassis, All	1
7	2-01101	Grip, Handle (Waffle), 1"	2
8	95-07121110	Handle, "J", PHW, PHWS	2
9	2-01157	Cap, PHW w/ Fuel Gauge, 14"	1
10	2-10881	Dip Tube, PHW Fuel	1
11	2-01164	Tank, Float, Universal Plastic	1
12	95-07121207	Lid & Hinges, Plastic Float Tank	1
13	10-99057	Label, Platinum Series	1
14	95-07101012	Axle, 27", PHW	2
	95-07101012A	Axle, 28.5", PHWS	2
15	4-02100013	Inlet Hose, Supply Water, 13" (4-2000, 4-3000, 5-3000)	1
16	4-02100009	Inlet Hose, Supply Water, 11" (All Models)	1
17	4-0303	Wheel & Tire Assembly, 4" (PHW)	4
	4-0304	Wheel & Tire Complete, 4" Mag (PHWS)	4
18	90-20041	Collar, 5/8" Bore Shaft 3010	4
19	2-1053	Nipple, 1/2" JIC x 1/2" Pipe (All Models)	1
20	95-07162007	Hose Connection Bracket, PHW, PHWS	1
21	2-10942	Swivel, 1/2" MP x 3/4" GHF	1
22	2-1902	Strainer, Inlet Garden Hose	1
23	90-1999	Screw, 10/32" x 3/4", BH SOC CS	6
24	90-40002	Washer, 1/4", SAE, Black Zinc	4
25	90-2018	Nut, Cage, 10/32" x 16 Ga.	6
26	90-2022	Nut, Cage, 1/4" x 16 Ga.	2
27	2-1042	Tee, 1/2" Street (4-2000, 4-3000)	1
28	2-1062	Elbow, 1/2" JIC x 1/2", 90° (4-2000, 4-3000)	1
29	10-020110	Label, Use Only Kerosene	1
30	2-1116	Elbow, 1/4" Tube x 1/8" MPT, 90°	2
31	90-5016	Nut, 3/8" - 16 NC Kimdorf w/ Spring	2
32	90-4002	Washer, 3/8", SAE, Flat	2
33	90-1018	Bolt, 3/8" x 1-1/2", NC	2
34	90-10201	Bolt, 3/8" x 2-1/4"	6
35	90-2020	Nut, Cage, 3/8" x 12 GA	2
36	90-2002	Nut, 3/8" ESNA	4
37	95-07290086	Assy, Lever, Brake	1
38	90-10151	Bolt, 3/8" x 3/8" Sckt Shdr	1
39	90-2001	Nut, 5/16" ESNA	1
40	90-4001	Washer, 5/16" Flat	3
41	2-01212	Cap, Vinyl Flat, Yellow	1

▲ Not Shown

PHW/PHWS POWER PLATFORM

ALL MODELS

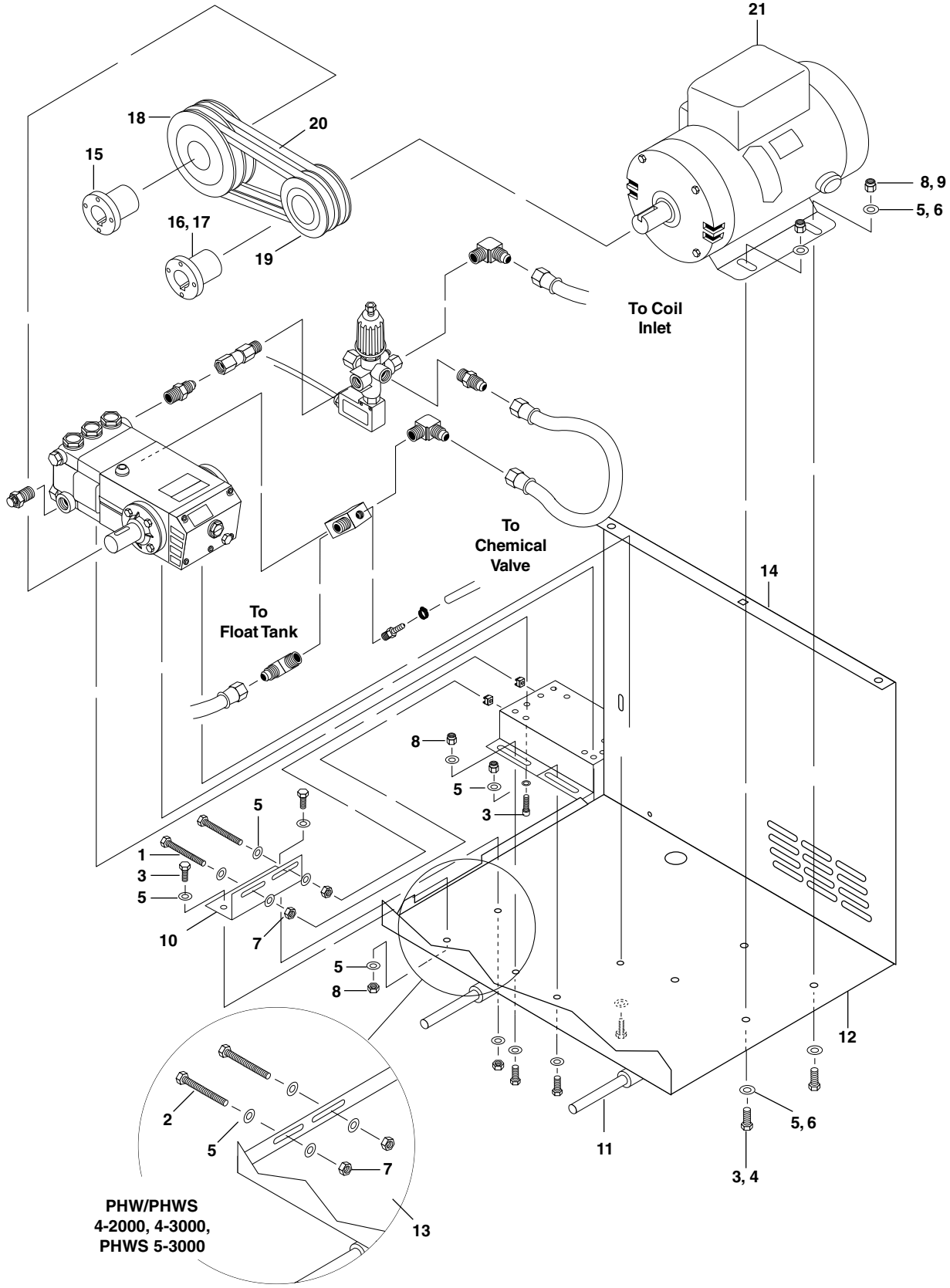

PHW/PHWS POWER PLATFORM
ALL MODELS PARTS LIST

ITEM	PART NO.	DESCRIPTION	QTY
1	90-10220	Bolt, 3/8" x 3-1/2", Tap (2-1100, 3-1100)	2
2	90-1025	Bolt, 3/8" x 5-1/2", NC HH Tap (4-2000, 4-3000, 5-3000)	2
3	90-1016	Bolt, 3/8" x 1", NC HH (2-1100, 3-1100 - QTY 6; 4-2000, 4-3000, 5-3000 - QTY 10)	
4	90-1007	Bolt, 5/16" x 1", NC HH (2-1100, 3-1100)	4
5	90-4002	Washer, 5/16" SAE, Flat (2-1100, 3-1100 - QTY 12; 4-2000, 4-3000, 5-3000 - QTY 20)	
6	90-4001	Washer, 5/16", SAE, Flat (2-1100, 3-1100)	8
7	90-2007	Nut, 3/8", Hex, NC	2
8	90-2002	Nut, 3/8", ESNA, NC (2-1100, 3-1100 - QTY 6; 4-2000, 4-3000 - QTY 10)	
9	90-2001	Nut, 5/16", ESNA, NC (2-1100, 3-1100)	4
10	95-07141110	Retainer, Pump Take Up (2-1100, 3-1100)	1
11	95-07101012	Axle, PHW, 27"	2
	95-07101012A	Axle, 28.5" PHWS w/ Mag Tires	2
12	95-07121013	Platform, Motor (2-1100, 3-1100)	1
13	95-071210136	Platform, Motor, 3/16" (4-2000, 4-3000, 5-3000)	1
14	95-07121010S	Chassis, All	1
15	5-512024	Bushing, H x 24 mm, All	1
16	5-511113	Bushing, H x 1-1/8" (4-2000)	1
	5-511075	Bushing, H x 3/4" (4-2000K/N/P)	1
	5-511063	Bushing, H x 5/8" (3-1100K)	1
17	5-511138	Bushing, H x 1-3/8" (4-3000N, 5-3000N)	1
18	5-40507001	Pulley, 2 BK 70 H (4-2000K, 5-3000N)	1
	5-40108401	Pulley, AK 84 H (2-1100, 3-1100)	1

ITEM	PART NO.	DESCRIPTION	QTY
18	5-40107401	Pulley, AK 74 H (PHW/PHWS3-1100, 4-3000)	1
	5-40506001	Pulley, 2 BK 60 H (4-3000N)	1
	5-40407001	Pulley, BK 70 H (4-2000N/P)	1
	5-40507001	Pulley, 2 BK 70 H (5-3000N)	1
	5-40205401	Pulley, 2 AK 54 H (4-2000)	1
19	5-40102158	Pulley, Bore, AK 21 x 5/8" (2-1100)	1
	5-40102558	Pulley, AK 25 x 5/8" (PHWS3-1100)	1
	5-40102858	Pulley, Bore, AK 28 x 5/8" (3-1100)	1
	5-40205401	Pulley, 2 AK 54H (4-3000)	1
	5-40204901	Pulley, 2AK 49H (4-2000)	1
	5-40403601	Pulley, BK 36 H (3-1100K, 4-2000N/P)	1
	5-40404001	Pulley, BK 40 H (4-2000K)	1
	5-40505401	Pulley, 2 BK 57 H (4-3000N, 5-3000)	1
20	5-602033	Belt, AX33 (PHWS3-1100, 4-2000)	1
	5-602035	Belt, AX35 (2-1100, 3-1100K)	1
	5-602036	Belt, AX36 (3-1100, 5-3000N)	1
	5-602037	Belt, AX37 (4-3000)	2
	5-603032	Belt, B-32 (4-2000N/P)	1
	5-604034	Belt, BX34 (4-3000N, 4-2000K)	2
	5-604036	Belt, BX36 (5-3000)	2
21	5-1011	Motor, 5 HP, 3 PH, 1725 RPM (4-2000B/C)	1
	5-1013	Motor, 7.5 HP, 1 PH, 1725 RPM (4-3000A)	1
	5-10145	Motor, 7.5 HP, 3 PH, 1725 RPM (4-3000B/C)	1
	5-10146	Motor, 7.5 HP, 3 PH, 1725 RPM (4-3000F)	1
	5-1018	Motor, 10 HP, 3 PH, 1725 RPM (5-3000B/C)	1

PHW/PHWS POWER PLATFORM

ALL MODELS PARTS LIST

ITEM	PART NO.	DESCRIPTION	QTY
21	5-1019	Motor, 20 HP 3 PH 220/380/440, 1450 RPM 50 Hz (5-3000N)	1
	5-1026	Motor, 10 HP, 3 PH, 1725 RPM (5-3000F)	1
	5-10401	Motor, 6 HP, 1 PH, 1725 RPM (4-2000A)	1
	5-1044	Motor, 1.5 HP, 1 PH, 3450 RPM (2-1100)	1
	5-1047M	Motor, 2 HP, 1 PH, 3450 RPM Magnetek (3-1100)	1
	5-1057	Motor, 2 HP, 220V 1 PH, 2850 RPM 50 Hz (3-1100K)	1
	5-1059	Motor, 5 HP 220V 1 PH, 2850 RPM, 50 Hz (4-2000K)	1
	5-1061	Motor, 5 HP 3 PH, 2850 RPM, 50 Hz (4-2000N/P)	1
	5-1063	Motor, 7.5 HP 3 PH, 220/380/440V, 1425 RPM 50 Hz (4-3000N)	1
	5-10402	Motor, 6 HP 1 PH, 1800 RPM, 200V (4-2000G)	1
	5-10111	Motor, 6 HP 3 PH, 1800 RPM 200V (4-2000H)	1
	5-10131	Motor, 7.5 HP 1 PH, 1800 RPM 200V (4-3000G)	1
	5-10144	Motor, 7.5 HP 3 PH, 1800 RPM 200V (4-3000H, 5-3000H)	1

PHW/PHWS PUMP ASSEMBLIES

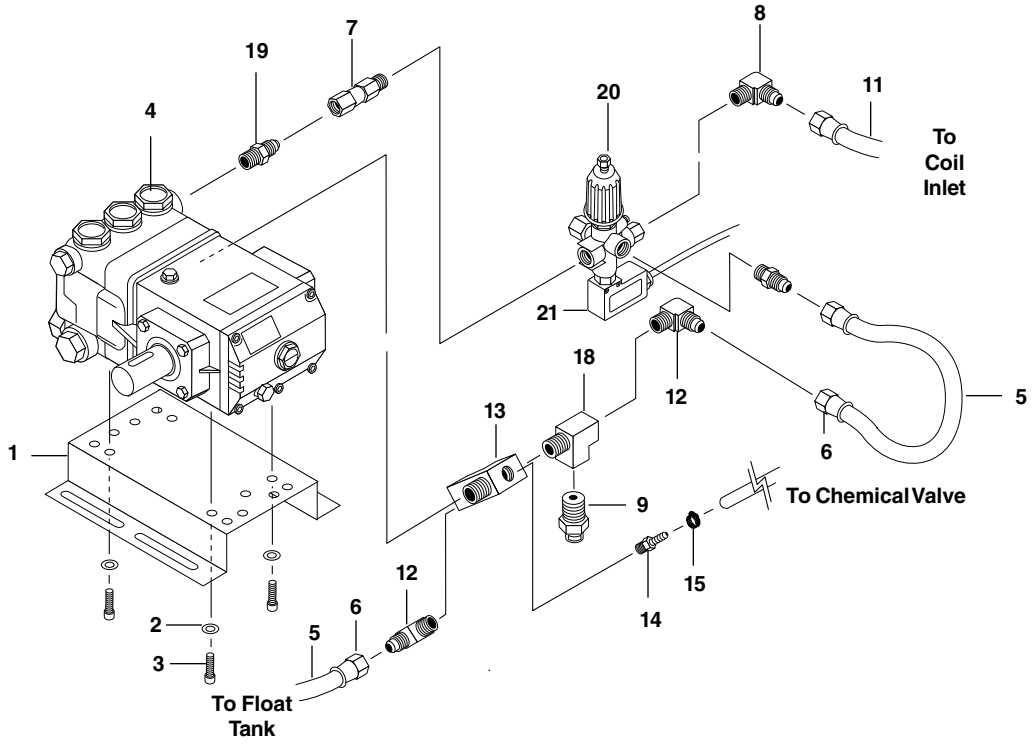

PHW2-11021D, PHWS3-11021D

PHWS - ALL MODELS
PHW4-2000, 4-3000

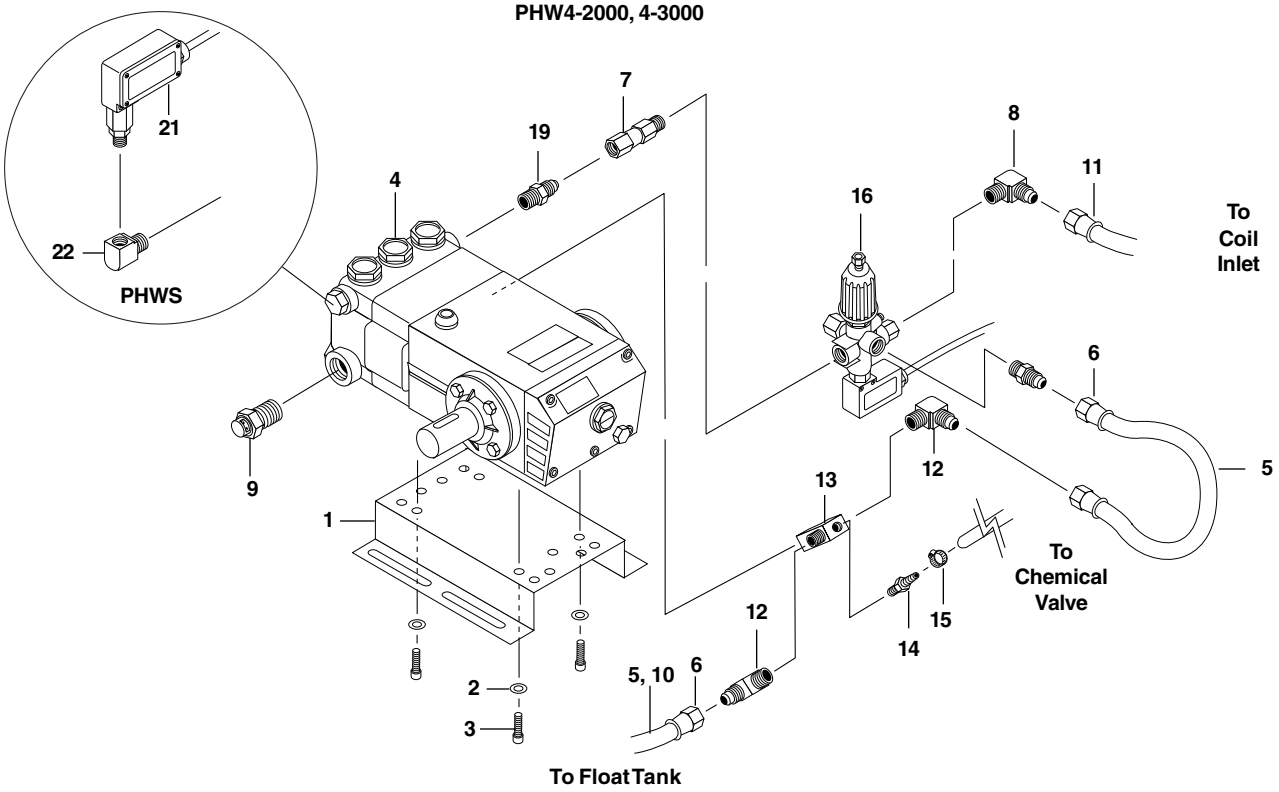

PHW/PHWS PUMP ASSEMBLIES

PARTS LIST

ITEM	PART NO.	DESCRIPTION	QTY
1	95-07121112	Rail, Pump Combo	1
	90-2019	▲ Nut, Cage, 3/8" x 16 GA	2
2	1-96710600	Washer	4
3	1-99364400	Screw	4
4	5-2302	Pump, General, T-991 (2-1100, 3-1100)	1
	5-2271	Pump, AR, XRA45G30 HN 4-3000N, 5-3000N)	1
	5-2273	Pump, AR, XMA35G25N (3-1100K, 4-2000K/N/P)	1
	5-23040	Pump, General, TS-1011 (4-2000, 4-3000)	1
	5-2307	Pump, General, TS-2021 (5-3000)	1
5	4-02110000	Hose, 1/2" Push-On /ft.	3
6	2-1105	Swivel, 1/2" JIC Fem., Push-On	3
	2-11050	Swivel, 3/4" JIC Fem., Push-On (5-3000)	2
7	2-0079	Swivel, 1/2" JIC Fem., 3/8" Male	1
8	2-0053	Elbow, 1/2" JIC x 3/8", 90°	1
9	2-30082	Pump Protector, 1/2" PTP (PHW Only)	1

ITEM	PART NO.	DESCRIPTION	QTY
10	4-02120000	Hose, 3/4" Push-On /ft. (5-3000)	1.5
11	4-02047725	Hose, 25" x 3/8", 100R2 Pres Loop	1
12	2-1062	Elbow, 1/2" JIC x 1/2", 90°	2
	2-10630	Elbow, 3/4" JIC x 1/2" (5-3000)	2
13	2-10421	Tee, 1/2" w/ 1/8" Hose, Street (2-1100, 3-1100 - QTY 2; PHWS, PHW4-2000, 4-3000)	1
14	2-1084	Hose Barb, 1/4" Barb x 1/8" ML Pipe	1
15	2-9000	Clamp, Screw, #4	1
16	5-3209	Unloader, AL686L w/Switch	1
	10-99011	▲ Label, Open for Steam	1
17	2-1052	Nipple, 1/2" JIC x 3/8", 90°	1
18	2-1042	Tee, 1/2" Street (PHW2-1100, 3-1100)	1
19	2-0051	Nipple, 1/2" JIC x 3/8" Pipe	1
20	5-3208	Unloader, AL607 (PHW)	1
21	6-02172	Switch, Pressure	1
22	2-0031	Elbow, 3/8" Street (PHWS)	1

▲ Not Shown

PHW/PHWS FLOAT TANK

ALL MODELS

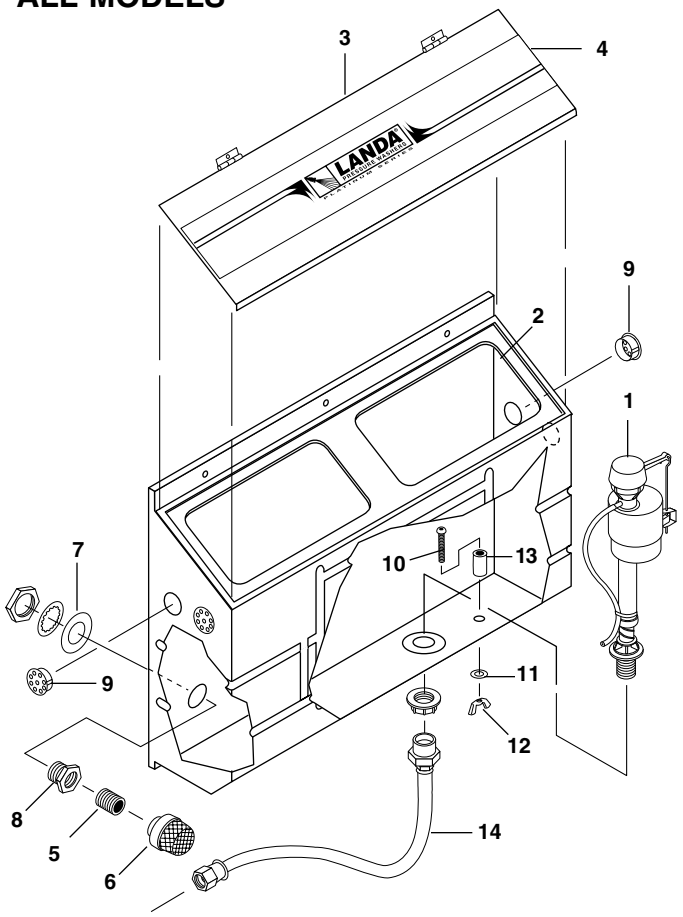

PHWS/PHW2-1100, 3-1100

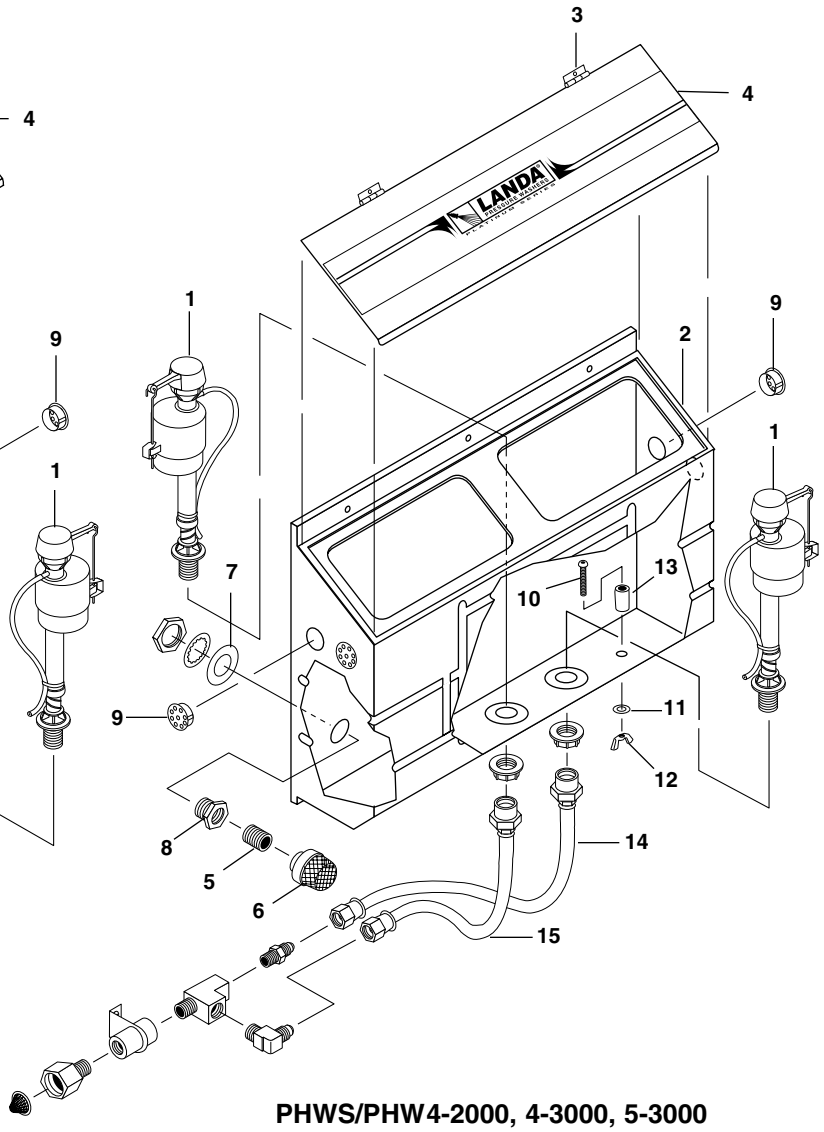

PHWS/PHW4-2000, 4-3000, 5-3000

ITEM	PART NO.	DESCRIPTION	QTY
1	2-3014	Valve, Float, Fluid Master, 400A	1
2	2-01164	Tank, Plastic, Universal Float	1
3	95-07121207	Lid & Hinges, Plastic Float	1
4	10-99051	Label, Hot Platinum Series, 7/94	1
5	2-10061	Modified Close Nipple, 1/2" NPT (3-1100)	1
	2-10062	Modified Close Nipple, 1/2" NPT (2-1100)	1
	2-1006	Nipple Close, 1/2" (4-2000)	1
	2-1053	Nipple, 1/2" JIC x 1/2" Pipe (4-3000)	1
6	2-1906	Strainer, Basket, 1/2"	1
7	90-4017	Washer, 1-3/16" x 2-1/4" STL RBR	1

ITEM	PART NO.	DESCRIPTION	QTY
8	2-11041	Connector, Anchor, 1/2"	1
9	2-0147	Plug, Overflow, Float Tank	2
10	2-0151	Plug Float Tank Assy. (#10-13)	1
	90-4030	Screw, 5/16"-18 x 1-1/2" SS, Button	1
11	90-4031	Nut, 5/16"-18, Wing, SS	1
12	90-4032	Washer, 5/16", SS	1
13	4-02100000	1/4", Push-on Hose /inch	1
14	4-02100009	Inlet Hose, 11" Supply Water (All Models)	1
15	4-02100013	Inlet Hose, 13" Supply Water (4-2000, 4-3000, 5-3000)	1

HOSE & SPRAY GUN ASSEMBLY

ALL MODELS

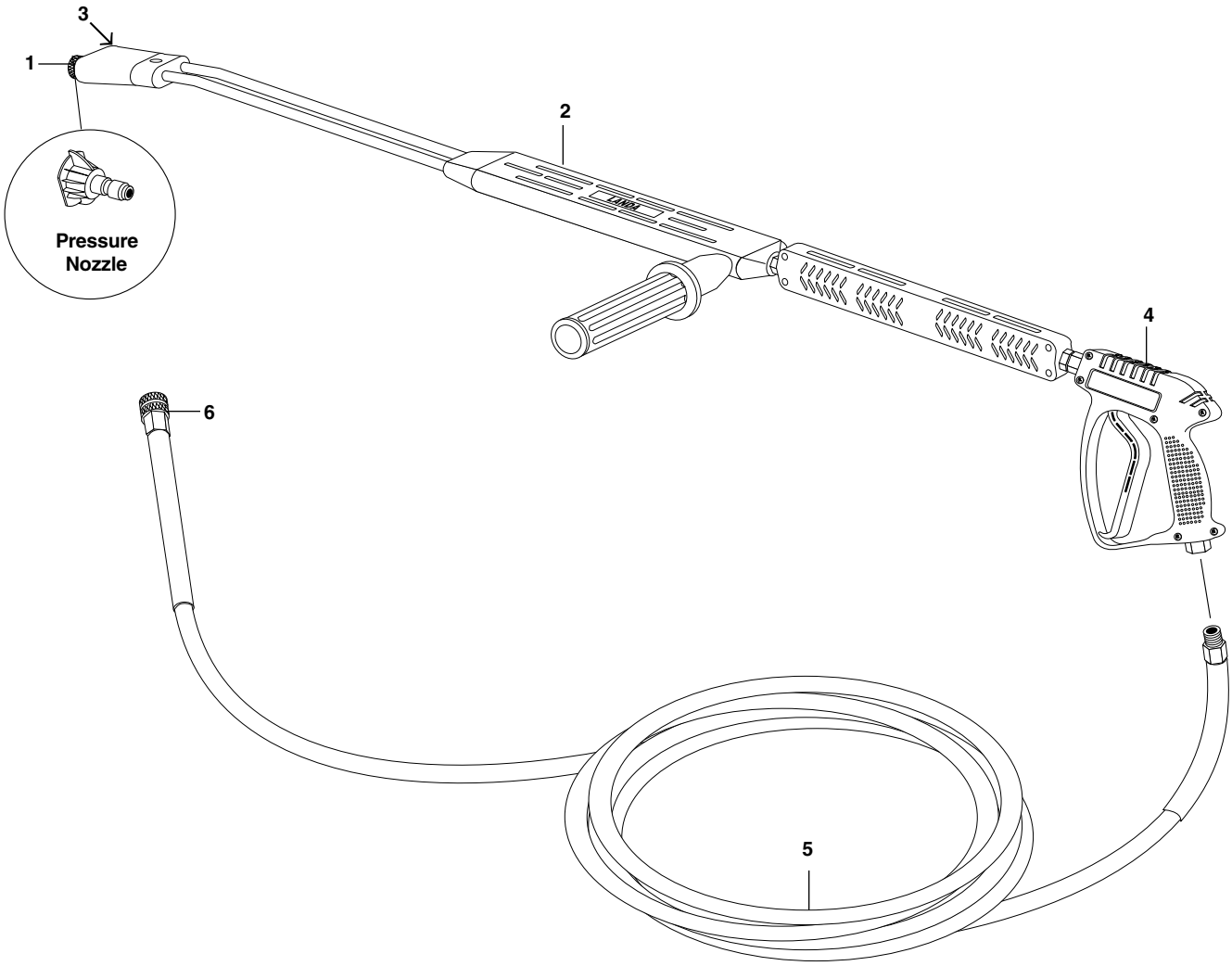

ITEM	PART NO.	DESCRIPTION	QTY
1	2-2001	Coupler, 1/4", Male	1
	2-0119	▲ O-Ring, Sm Coupler, High Heat, 1/4"	1
2	4-011143A	Wand, SS, V.P. Wand, AR (AL 344) w/ Coupler	1
	4-0111391	Wand Only, SS.V.P. Wand, AR (AL 344)	1
	83-SSVPKIT	Repair Kit, AR SS Seat (AL 334, 344)	1

ITEM	PART NO.	DESCRIPTION	QTY
3	4-06540	Nozzle Only, 1/8"	1
4	4-01212	Spray Gun, Shut-Off, Series 2000	1
5	4-0204345C	Hose only, 50' x 3/8", 100R2 w/ Coupler	1
6	2-2002	Coupler, 3/8" Female	1
	2-0121	▲ O-Ring, LG, Coupler, High Heat, 3/8"	1

▲ Not Shown

TROUBLESHOOTING

PROBLEM	POSSIBLE CAUSE	SOLUTION
LOW OPERATING PRESSURE	Faulty pressure gauge	Test with 2nd gauge. If bad, install new gauge.
	Insufficient water supply	Use larger garden hose; clean water filter at inlet. Clean screen inside float tank.
	Old, worn or incorrect nozzle	Match nozzle number to machine and/or replace with new nozzle.
	Belt slippage	Tighten or replace; use correct belt.
	Plumbing or hose leak	Check plumbing system for leaks. Retape leaks with teflon tape.
	Faulty or misadjusted unloader valve (where applicable)	Adjust unloader for proper pressure. Install repair kit when needed. Test PSI with unloader removed, taking pressure directly off the pump.
	Worn packing in pump	Install new packing kit.
	Fouled or dirty inlet or discharge valves in pump	Clean inlet and discharge valves.
	Worn inlet or discharge valves	Replace with valve kit.
	Obstruction in spray nozzle	Remove obstruction.
	Low power supply	Check voltage of building and compare with requirements. Obtain a different power source.
	Chemical metering valve left open sucking air, or faulty metering valve	Close and/or replace metering valve.
BURNER WILL NOT LIGHT	Little or no fuel	Fill tank with fuel.
	Improper fuel or water in fuel	Drain fuel tank and fill with proper fuel.
	Plugged fuel filter	Replace as needed.
	Misadjusted burner air bands	Readjust air bands for clean burn.
	Little or no fuel pressure from fuel pump	Increase fuel pressure to specifications and/or replace fuel pump.
	Faulty burner transformer	Test transformer for proper arc between contacts. Replace as needed.
	Disconnected or short in electrical wiring	All wire contacts should be clean and tight. No breaks in wire.
	Burner motor thermal protector tripped	If tripped, check voltage, connections and extensions for cause. Check fuel pump shaft rotation for binding causing motor to overheat.
	Flex-Coupling slipping on fuel pump shaft or burner motor shaft	Replace if needed.
	ON-OFF switch defective	Check burner switch for continuity.

TROUBLESHOOTING

PROBLEM	POSSIBLE CAUSE	SOLUTION
BURNER WILL NOT LIGHT (continued)	Heavy sooting on coil and burner can cause interruption of air flow and shorting of electrodes.	Clean as required.
	Improper electrode setting	Clean and set according to diagram in Operator's Manual.
	Fuel not reaching combustion chamber	Check fuel pump for proper flow. Check solenoid flow switch on machines with spray gun control for proper on-off fuel flow control.
	Clogged burner nozzle	Replace.
	Water not flowing through unloader to activate micro switch	Open spray gun to allow water to flow.
	Pressure switch malfunction	With voltmeter, check pressure switch for proper operation.
	Fuel solenoid malfunction	Replace if needed.
MACHINE SMOKES	Improper fuel or water in fuel	Drain tank and replace contaminated fuel.
	Improper air adjustment	Readjust air bands on burner assembly.
	Low fuel pressure	Call technical support.
	Air leaks in fuel lines	Check fuel lines for leaks or air bubbles. Tighten or replace as needed.
	Plugged or dirty burner nozzle	Replace.
	Faulty burner nozzle spray pattern	Replace nozzle.
	Heavy accumulation of soot on coils and burner assembly	Remove coils and burner assembly. Clean thoroughly.
	Misaligned electrode	Call technical support.
	Obstruction in smoke stack	Check for insulation blockage or other foreign objects.
LOW WATER TEMPERATURE	Improper fuel or water in fuel	Drain fuel tank and replace with proper fuel.
	Low fuel pressure	Increase fuel pressure.
	Weak fuel pump	Check fuel pump pressure. Replace pump if needed.
	Fuel filter partially clogged	Replace if needed.
	Soot build-up on coils	Clean coils with soot remover.
	Lime build-up in coils	Clean inside of coils with coil clean.
	Improper burner nozzle	See tank assembly parts list for correct nozzle.

TROUBLESHOOTING

PROBLEM	POSSIBLE CAUSE	SOLUTION
WATER TEMPERATURE TOO HOT	Incoming water to unit warm or hot	Lower incoming water temperature.
	Fuel pump pressure too high	Call technical support.
	Fuel pump defective	Replace fuel pump.
	Chemical line sucking air	Tighten all clamps. Check chemical line for holes.
	Defective high limit switch	Replace.
	Incorrect fuel nozzle size	See exploded view parts list for proper size.
	Insufficient water supplied	Check GPM to machine.
	Restricted water flow	Check nozzle for obstruction and proper size.
PUMP MOTOR STOPS AFTER A FEW MINUTES OF OPERATION OR STARTS SLOW	Insufficient voltage	Use heavier drop cord and check voltage at receptacle. Check name plate for amperage draw.
	Plugged nozzle	Remove and clean nozzle. Turn on water pump and flush lines, replace nozzle.
	Wrong spray nozzle	See serial plate for minimum nozzle size.
	Automatic overload switch tripped	Allow motor to cool - switch will automatically reset.
	Motor wet	Allow to dry.
	Short in electrical wiring	Wire contacts should be clean and tight. No breaks in wires.
	Coil liming up causing excessive pressure	See section on Preventative Maintenance.
	Water pump low or out of oil causing the pump to bind up	Fill to correct level.
RELIEF VALVE LEAKS OR SPRAYS OUT WATER	Spray nozzle plugged	Remove nozzle and clean out obstruction.
	Misadjusted or defective relief valve	Adjust or replace as needed.
	Scale or dirt plugging inside of coils	See "Preventative Maintenance Cleaning of Coils."
CHEMICAL NOT DRAWING	Air leak	Tighten all clamps. Check chemical lines for holes.
	Chemical metering valve packing not tight or packing worn	Tighten nut. Replace valve or packing.
	Filter screen on chemical suction hose plugged	Clean or replace.
	Dried up chemical plugging metering valve or injector	Clean and flush.
	Restrictor in float tank missing	Install restrictor.
	High viscosity of chemical	Dilute chemical to specifications. Read chemical label.

TROUBLESHOOTING

PROBLEM	POSSIBLE CAUSE	SOLUTION
MACHINE WILL NOT DRAW UP CHEMICAL	Clamps holding chemical lines are loose	Tighten clamps.
	Hole in chemical line(s)	Repair hole.
	Strainer basket plugged	Remove and clean.
BURNER MOTOR WILL NOT RUN	Overload protector tripped	Push reset button.
	Fuel pump seized	Replace fuel pump.
	Burner fan loose or misaligned	Position correctly and tighten set screw.
	Defective control switch	Replace switch.
	Loose wire	Check and replace or tighten wiring.
	Defective burner motor	Replace motor.
EXCESSIVE VIBRATION IN DELIVERY LINE	Irregular functioning of check valves, metering valves	Check and replace if necessary.
TEMPERATURE RELIEF VALVE LEAKS WATER (pump protector)	Spray gun in OFF position with machine operating for an extended period of time	Open spray gun to cool circulating water.
	Relief valve defective	Replace valve.
	Particle next to poppet	Remove internal parts and clean.
BURNER STAYS ON WHEN SPRAY GUN IS IN OFF POSITION	Fuel pump pressure too high	Call technical support.
	Pressure switch defective	Check for proper operation, replace if necessary.
	Fuel solenoid defective	Replace fuel solenoid.
PUMP RUNNING NORMALLY BUT PRESSURE LOW	Pump sucking air	Check water supply and possibility of air seepage.
	Valves sticking	Check and clean or replace if necessary.
	Unloader valve seat faulty	Check and replace if necessary.
	Nozzle incorrectly sized	See serial plate for minimum nozzle size.
	Worn piston packing	Check and replace if necessary.
PUMP NOISY	Air in suction line	Check water supply and connections on suction line.
	Broken or weak inlet or discharge valve springs	Check and replace if necessary.
	Excessive temperature of liquid	Reduce to below 60° C (140° F).
	Foreign matter in valves	Check and clean if necessary.
	Worn bearings	Check and replace if necessary.

TROUBLESHOOTING

PROBLEM	POSSIBLE CAUSE	SOLUTION
PRESENCE OF WATER IN OIL	Oil seal worn	Check and replace if necessary.
	High humidity in air	Check and change oil twice as often.
	Piston packing worn	Check and replace if necessary.
WATER DRIPPING FROM UNDER PUMP	Piston packing worn	Check and replace if necessary.
	O.R. Plunger retainer worn	Check and replace if necessary.
	Cracked ceramics	Check and replace if necessary.
OIL DRIPPING	Oil seal worn	Check and replace if necessary.
	Cracked manifold	Check and replace if necessary.
WON'T AUTOSTART	Unloader microswitch faulty	Jumper positions "C" and "6" on the timer together. If motor starts, replace unloader.
	Timer faulty	Jumper wire positions "C" and "NO" together. If motor starts, replace timer.
WON'T TIMEOUT	Unloader microswitch faulty	Check microswitch wires for continuity with spray gun closed (water flowing). No continuity with spray gun open (by-pass mode). Replace if necessary.
	Timer faulty	Jumper positions "C" and"6" on timer together. Machine runs. Remove jumper wire. Machine will shut-off in 15 seconds. If not, replace timer.

TROUBLESHOOTING
UNLOADER

PROBLEM	POSSIBLE CAUSE	SOLUTION
SYSTEM WILL NOT COME UP TO FULL DESIGNATED PRESSURE	Spray nozzle worn or nozzle orifice is too large in relation to pump flow rate	See serial plate for correct nozzle size.
	Adjusted improperly	Readjust unloader with pressure gauge.
	Bypass valve (within unloader) is obstructed or leaking	Remove and clean bypass cartridge or replace.
	Flow rate of pump inadequate	Assure designated flow rate of pump is adequate in relation to spray nozzle size.
PRESSURE SPIKES IN DISCHARGE LINE DURING BYPASS MODE	Pressure adjustment too tight	Call technical support.
	Restricted bypass line	Bypass line should be 1/2" inside diameter (I.D.), 12" long and of low pressure flexible hose.
	Flow rate higher than 8 gpm	Unloader flow rate is 7.8 gpm maximum.
UNLOADER CYCLES WHILE IN BYPASS MODE	External leak on unloader or in downstream fittings	Inspect all high pressure lines (including spray gun and hose) for any signs of leakage and repair as necessary.
	Discharge valve (within the unloader) damaged, obstructed or worn	Inspect and replace as necessary.
	Weep gun is being used	The unloader is not designed for use with a weep gun.

PREVENTATIVE MAINTENANCE

This pressure washer was produced with the best available materials and quality craftsmanship. However, you as the owner have certain responsibilities for the correct care of the equipment. Attention to regular preventative maintenance procedures will assist in preserving the performance of your equipment. Contact your Landa, Inc. dealer for maintenance. Regular preventative maintenance will add many hours to the life of your pressure washer. Perform maintenance more often under severe conditions.

MAINTENANCE SCHEDULE		
Replace Fuel Lines		Annually
Pump Oil	Inspect	Daily inspect the oil level
	Change	After first 50 hours, then every 500 hours or annually
Clean Burner Filter		Monthly (More often if fuel quality is poor)
Remove Burner Soot		Annually
Burner Adjustment/Cleaning		Annually
Descale Coil		Annually - (More often if required)
Replace High Pressure Nozzle		Every 6 months
Replace Quick Connects		Annually
Clean Water Screen/Filter		Weekly
Clean Float/Supply Tank		Every 6 months
Replace HP Hose		Annually if there is any sign of wear
Grease Motor		Every 10,000 hours
Replace Burner Nozzle		Annually

OIL CHANGE RECORD

Date Oil Changed Month/Day/Year	Estimated Operating Hours Since Last Oil Change

LANDA LIMITED NEW PRODUCT WARRANTY
PRESSURE WASHERS

WHAT THIS WARRANTY COVERS

All LANDA pressure washers are warranted by LANDA, INC. to the original purchaser to be free from defects in materials and workmanship under normal use, for the periods specified below. This Limited Warranty is subject to the exclusions shown below, is calculated from the date of the original purchase, and applies to the original components only. Any parts replaced under this warranty will assume the remainder of the part's warranty period.

LIFETIME PARTS AND ONE YEAR LABOR WARRANTY:

Brass manifolds on all pressure washer pumps carry an unconditional warranty.

FIVE YEAR PARTS AND ONE YEAR LABOR WARRANTY:

Components manufactured by Landa, such as frames, handles, coil wraps, float tanks, fuel tanks, belt guards, and coils. Internal components on the oil-end of all pressure washer pumps.

ONE YEAR MINIMUM ON PARTS AND ONE YEAR LABOR WARRANTY:

All other components, excluding normal wear items as described below, will be warranted for the duration specified by the original component manufacturer, with a one year minimum. Labor warranty on these parts will be for one year regardless of the duration of the original component manufacturer's part warranty.

WARRANTY PROVIDED BY OTHER MANUFACTURERS:

Motors, generators, and engines, which are warranted by their respective manufacturers, are serviced through these manufacturers' local authorized service centers. LANDA cannot provide warranty on these items.

WHAT THIS WARRANTY DOES NOT COVER

This warranty does not cover the following items:

1. Normal wear items, such as nozzles, guns, discharge hoses, wands, quick couplers, seals, filters, gaskets, O-rings, packings, pistons, pump valve assemblies, strainers, belts, brushes, rupture disks.
2. Damage or malfunctions resulting from accidents, abuse, modifications, alterations, incorrect installation, improper servicing, failure to follow manufacturer's maintenance instructions, or use of the equipment beyond its stated usage specifications as contained in the operator's manual.
3. Damage due to freezing, chemical deterioration, scale build up, rust, corrosion, or thermal expansion.
4. Damage to components from fluctuations in electrical or water supply.
5. Normal maintenance service, including adjustments, fuel system cleaning, and clearing of obstructions.
6. Transportation to service center, field labor charges, or freight damage.
7. Labor warranty is specifically excluded for all machines used for rental purposes.

WHAT YOU MUST DO TO OBTAIN WARRANTY SERVICE

While not required for warranty service, we request that you register your LANDA pressure washer by returning the completed registration card. In order to obtain warranty service on items warranted by LANDA, you must return the product to your Authorized LANDA Dealer, freight prepaid, with proof of purchase, within the applicable warranty period. If the product is permanently installed, you must notify your Authorized LANDA Dealer of the defect. Your Authorized LANDA Dealer will file a claim with Landa, who must subsequently verify the defect. In most cases, the part must be returned to LANDA freight prepaid with the claim. For warranty service on components warranted by other manufacturer's, your Authorized LANDA Dealer can help you obtain warranty service through these manufacturers' local authorized service centers. If you are unable to resolve the warranty claim satisfactorily, write to LANDA at 4275 N.W. Pacific Rim Blvd., Camas, WA 98607, ATTN: Warranty Dept., detailing the nature of the defect, the name of the Authorized LANDA Dealer, and a copy of the purchase invoice.

LIMITATION OF LIABILITY

LANDA'S liability for special, incidental, or consequential damages is expressly disclaimed. In no event shall LANDA'S liability exceed the purchase price of the product in question. LANDA makes every effort to ensure that all illustrations and specifications are correct, however, these do not imply a warranty that the product is merchantable or fit for a particular purpose, or that the product will actually conform to the illustrations and specifications. **THE WARRANTY CONTAINED HEREIN IS IN LIEU OF ALL OTHER WARRANTIES, EXPRESS OR IMPLIED, INCLUDING ANY IMPLIED WARRANTY OF FITNESS FOR A PARTICULAR PURPOSE.** LANDA does not authorize any other party, including authorized LANDA Dealers, to make any representation or promise on behalf of LANDA, or to modify the terms, conditions, or limitations in any way. It is the buyer's responsibility to ensure that the installation and use of LANDA products conforms to local codes. While LANDA attempts to assure that its products meet national codes, it cannot be responsible for how the customer chooses to use or install the product.

INTRODUCCION

Gracías por comprar un Lavadora a Presión Landa.

Estas instrucciones y advertencias corresponden a los modelo PHW/PHWS.

Landa, Inc. se reserva el derecho de hacer cualquier cambio en cualquier momento sin contraer ninguna obligación.

Responsabilidades del Dueño/Usuario:

El dueño y/o usuario debe estar al tanto de las instrucciones de operación y de las advertencias del fabricante antes de usar su lavadora a presión Landa. La información de advertencia debe ser enfatizada y comprendida. Si el operador no domina el inglés, el comprador/dueño deberá leer y discutir con éste las instrucciones y las advertencias del fabricante en el idioma natal del operador, asegurándose de que éste entienda su contenido.

El dueño y/o usuario debe estudiar y mantener las instrucciones del fabricante para futuras referencias.

Este manual debe ser considerado una parte permanente de la máquina y deberá entregarse con la máquina en caso de que se venda.

Cuando ordene las partes, por favor especifique el modelo y el número de serie.

SEGURIDAD DE LA MAQUINA

PRECAUCION: Para reducir el riesgo de accidentes, lea las instrucciones cuidadosamente antes de usar la unidad.

1. Lea todo el manual para operadores cuidadosamente. Al no seguir las instrucciones puede causar el mal funcionamiento de la unidad y provocar la muerte, o causar serias heridas y/daños en la propiedad.
2. Todas las instalaciones deben cumplir con los códigos locales. Póngase en contacto con un técnico eléctrico, plomero, compañía de servicios públicos o distribuidor de ventas para mayores detalles.

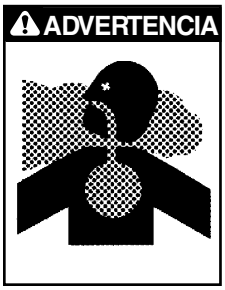

ADVERTENCIA: Riesgo de asfixia. Use este producto solo en areas bien ventiladas.

3. Evite instalar unidades en áreas pequeñas o cerca de ventiladores de gases de escape. Los gases de escape contienen gas venenoso de monóxido de carbono; la exposición puede causar pérdida del conocimiento y causar la muerte. Los gases de escape también contienen químicos, en ciertas cantidades, que se sabe, causan cáncer, defectos de nacimiento, o daños al sistema reproductivo.

ADVERTENCIA: Liquidos inflamables pueded crear gases que se encienden causando daños a la propiedad y heridas severas.

4. Aparatos de encendido con petróleo deberán de ser instalados en lugares donde residuos de combustibles, vapores o gases inflamables no estén normalmente presentes. En modelos de encendido con petróleo utilice únicamente kerosene #1 o diesel. No utilize gasolina, solventes o alcohol. El utilizarlo resultará en fuego y/o explosión.

ADVERTENCIA: Mantenga el chorro de agua, la varilla y la manguera de alta presión lejos del cableado eléctrico ya que puede ocurrir un choque fatal. Lea la etiqueta de avertencia del cable eléctrico

5. Para proteger al operador de un choque eléctrico, la máquina deberá de estar conectada a tierra. Es la responsabilidad del dueño de conectar esta máquina a un receptáculo a tierra aprobado por UL con el amperage y voltaje indicados. No moje sobre o cerca de los componentes eléctricos; no toque la máquina con las manos mojadas o cuando esté parado sobre agua. Siempre desconecte la máquina cuando le dé servicio de mantenimiento.

ADVERTENCIA: Sostenga la pistola aspersora con ambas manos ya que con la alta presión esta puede tener retroceso.

6. Sujete firmemente con ambas manos la varilla aspersora antes de encender la maquina; de no seguir esta recomendación puede resultar en heridas por golpe de la misma.
7. No coloque la máquina cerca de objetos inflamables si el motor esta caliente.

ADVERTENCIA: Este equipo puede producir un fluido de alta persión a chorro que puede penetrar la piel y sus tejidos, causando graves heridas y posible amputacion.

8. Las altas presiones desorrolladas por esta unidad causarán heridas personales o daño al equipo. Use precaución cuando esté operando el equipo. No dirija el chorro de descarga hacia la gente porque de lo contrario puede causarles heridas graves incluyendo la muerte.

IDENTIFICACION DE COMPONENTES - PHW

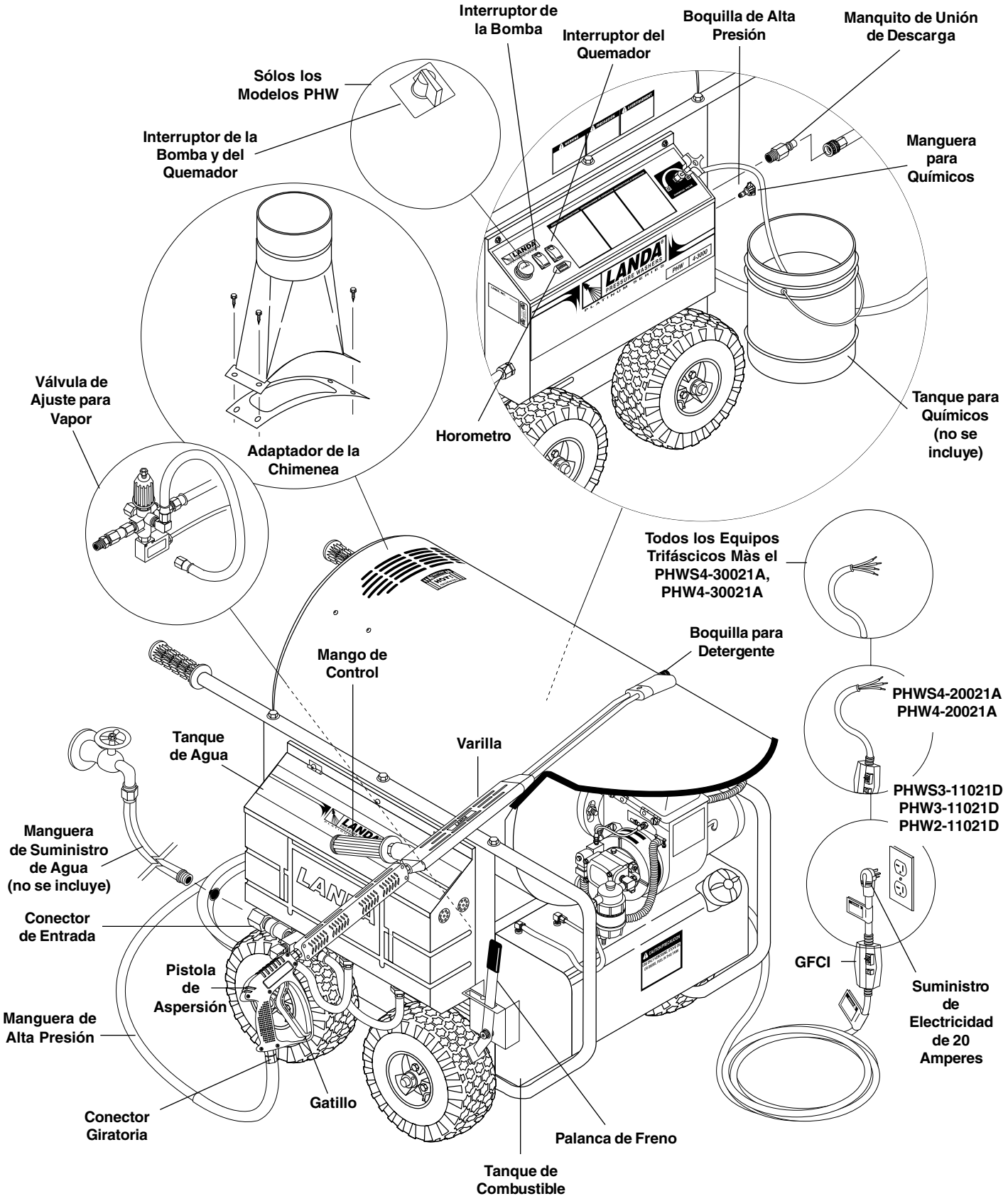

9. Nunca haga ajustes en la máquina mientras esté operando.

ADVERTENCIA: Un chorro de alta presión puede ocasionar que trozos de pintura y otras particulas vuelen a altás velocidades por el aire.

10. Elementos de seguridad para la protección de los ojos y los pies deben ser usados con este equipo.
11. Unidades con pistola de apagado no deben ser operadas con la pistola en la posición apagada por largos períodos de tiempo pues ésto puede causar daños a la bomba.
12. El mejor seguro contra un accidente es la precaución y el conocimiento de la máquina.
13. Landa no se hará responsable de ninguno de los cambios hechos a nuestras unidades estándar, o por ningún componente que no sea comprado directamente a Landa.

ADVERTENCIA: Mantenga el chorro de agua lejos de cables eléctricos para prevenir graves choques eléctricos.

14. Lea las instrucciones de seguridad proporcionadas para el motor.
15. Nunca opere la bomba en vacio o deje la pistola cerrada más de 5 minutos.
16. No permita que los niños operen la lavadora a presión en ningún momento.
17. Para prevenir una herida grave asegúrese que el conector rápido de la manguera de descarga este bien ajustado ántes de usar la máquina lavadora a presión.
18. No permita que ácidos a fluídos abrasivos pasen a través de la bomba hidráulica.
19. No opere esta máquina estando fatigado o bajo la influencia del alcohol o drogas. Mantenga el área de operación lejos de las personas.
20. El agua de entrada deberá ser fría.
21. No se sobreestire o pare en soportes inestables, mantenga el balance y pie firme en todo momento.
22. Siga las instrucciónes de mantenimiento especificados en el manual.
23. Siempre desconecte la máquina cuando realice reparaciones a la misma.
24. Apague el quemador y libere de presión la pistola y manguera de aspersión. Enfríe el serpentín a 100°F antes de apagar la máquina.

PRECAUCION: Asegúrese que el quemador esté apagado y que el gatillo de la pistola de aspersión este cerrado.

VERIFICACION ANTES DE OPERACION

- Aceite para bomba (aceite SAE 30W sin detergente, general)
- Suministro de agua fría (6 gpm • 5/8" • 20 psi)
- Manguera, varilla, boquilla (tamaño de boquilla según placa de serie)
- Filtro de agua (intacto, no restrictivo)

PROCEDIMIENTOS DE INSTALACION

Este equipo es para uso en interior. Este equipo debe ser guardado bajo techo cuando no esta en operacion.

1. Conecte una manguera de jardin de 5/8" al conector de entrada. El flujo mínimo debe ser de 5 gpm.
2. Conecte una manguera de alta presión a la boquilla de descarga usando una conexion rápida. Asegure el conector ajustándolo en su lugar tirando el collar del enganche trasero hacia atrás e insertádolo en la boquilla de descarga y empujando el collar después hacia adelante para asegurarlo en su lugar.
3. Conecte la varilla a la pistola de riego usando cinta de teflón en la rosca para prevenir fugas.
4. Conecte el conector giratorio (swivel) en la manguera de descarga a la pistola de riego usando cinta de teflon en la rosca.
5. Remueva el tapón del aceite de encima de la bomba de la lavadora a presión y reemplácelo con el medidor de nivel (dipstick) proporcionado.
6. Verifíque el nivel del aceite en el vidrio de observación que está al lado de la bomba. El aceite debe ser visible hasta la mitad del vidrio de observación (30W no-detergente).
7. Esta unidad cuando esté instalada deberá de estar eléctricamente conectada a tierra y en concordancia con las reglas locales de servicio público.

INSTRUCCIONES DE ENCENDIDO Y OPERACION

1. ¡ALTO! Lea el manual de operación antes de operar ésta máquina. Omisión de leer el instructivo de seguridad y operación pueda resultar en lesión personal o daño a la propiedad.
2. Conecte la manguera del suministro de agua al conector de entrada y abra la llave de paso.

3. Revise los niveles de aceite y combustible.
4. Conecte la manguera de alta presión al niple de descarga deslizando el acople rápido hacia atrás (si se va a utilizar algún químico, instale - el inyector apropiado para químicos como se muestra en la página E).
5. Inserte el cople rápido al niple de descarga y asegurelo empujando el collar del conector rápido hacia adelante.
6. Instale firmemente la boquilla de alta presión que desee a la varilla de aspersión como se describe en los pasos 4 y 5.
7. Conecte el cable eléctrico a la fuente de poder apropiado y oprima el - botón de encendido del cable eléctrico GFCI.
8. Sujete firmemente la varilla de aspersión y abra la válvula de presión en sentido inverso a las manecillas del reloj.
9. Oprima el switch en posición de la bomba hidráulica cuando obtenga un flujo contínuo de agua por la varilla de aspersión. La unidad se encuentra lista para utilizar agua fría para limpieza al abrir la válvula de presión en sentido de las manecillas de reloj para alcanzar la presión deseada.
10. Para utilizar agua caliente oprima el switch en posición del quemador. (el quemador se encenderá automáticamente).

TECNICAS GENERALES DE LAVADO

1. Sostenga la boquilla de riego aproximadamente a 30 cm de la superficie a lavar. Riegue a cierto ángulo a modo que golpée debajo de la sucidad o materia y la deprenda.
2. Cuando esté lavando objetos grandes, use un inyector químico opcional para aplicar el detergente. Empiece el lavado de abajo hacia arriba. Se ahorrará químico y obtendrá resultados más rápidos si permite que el químico se asiente de 5 a 10 minutos. Después de lavar, enjuage de arriba hacia abajo.
3. Para la limpieza de mugre o materia pesada se recomienda un fuerte chorro de agua limpia antes de usar el agente limpiador.

ADVERTENCIA: Con la maquina apagada, aaabra la pistola para dejar salir la presión antes de remover la manguera de descarga.

GARANTÍA DE LANDA PARA SUS PRODUCTOS EQUIPOS DE LAVADO A PRESIÓN

QUÉ CUBRE ESTA GARANTÍA

LANDA, INC. garantiza al primer comprador que todos los equipos LANDA de lavado a presión están libres de defectos de materiales y de fabricación durante el uso normal de la unidad y durante el tiempo que se indica más abajo. Esta Garantía Limitada está sujeta a las exclusiones que se muestran a continuación. Dicha garantía entra en vigencia a partir de la fecha de la compra del equipo y se aplica únicamente a los componentes originales. Cualquier parte que se reemplace durante el período cubierto por esta garantía estará comprendida en el período de garantía restante para dicha parte.

GARANTÍA DE POR VIDA PARA LAS PARTES Y DE UN AÑO PARA LA MANO DE OBRA:

El colector de tubos de latón de todas las bombas de lavado a presión están amparados bajo una garantía incondicional.

GARANTÍA DE CINCO AÑOS PARA LAS PARTES Y DE UN AÑO PARA LA MANO DE OBRA:

Esta garantía cubre los componentes fabricados por Landa, como por ejemplo bastidores, manijas, envoltura de bobinas, tanques flotadores, tanques de combustible, cubiertas de correas y bobinas. La garantía para las bobinas norma 40 será prorrateada a razón del 25% por año después de dos años. Los componentes internos relacionados con el aceite de todas las bombas de lavado a presión también están cubiertos por esta garantía.

GARANTÍA DE UN AÑO MÍNIMO PARA LAS PARTES Y DE UN AÑO PARA LA MANO DE OBRA:

El resto de los componentes, sin incluir el desgaste normal de los artículos que se describen abajo, estará cubierto por el período que especifique su fabricante original, con un año como mínimo. La garantía para la mano de obra que se aplica a estas partes será de un año, sin perjuicio de la duración de la garantía del fabricante del componente original.

GARANTÍA SUMINISTRADA POR OTROS FABRICANTES:

Los motores, generadores y máquinas están cubiertos por la garantía de sus fabricantes. Los centros de servicios locales autorizados por sus fabricantes prestan el servicio de mantenimiento y reparación de dichas unidades. LANDA no puede proporcionar garantía alguna para estos artículos.

REPUESTOS NO CUBIERTOS POR LA GARANTÍA:

Estas partes, sin incluir el desgaste normal de los artículos que se describen abajo, estarán cubiertas por el período que especifique su fabricante original. Estas partes no están cubiertas por la garantía de mano de obra.

ESTA GARANTÍA NO CUBRE:

Esta garantía no cubre los siguientes artículos:

1. Artículos que tienen un desgaste normal, como ser boquillas, pistolas, mangueras de descarga, extensiónes, acopladores de conexión rápida, sellos, filtros, juntas, anillos en “O”, empaquetados, pistones, montaje de válvulas, filtros de malla, correas, cepillos, etc.
2. Daño o malfuncionamiento debido a accidentes, abuso, modificaciones, alteraciones, instalación inapropiada, servicio inapropiado, incumplimiento de las instrucciones de mantenimiento del fabricante o uso del equipo con otros fines que no se adhieran a las especificaciones contenidas en el Manual del operador.
3. Daño a causa de heladas, deterioro debido a productos químicos, acumulación de escamas, oxidación, corrosión o expansión térmica.
4. Daño a los componentes debido a fluctuaciones en el suministro eléctrico o al abastecimiento de agua.
5. Servicio de mantenimiento normal, incluso los ajustes, limpieza del sistema de combustible y de obstrucciones.
6. Transporte al centro de servicios, cargos por mano de obra en planta o daño ocurrido durante el flete.
7. El trabajo de mano de obra se excluye especialmente para todas las máquinas que se utilizan como equipos de alquiler.

QUÉ DEBE HACER PARA OBTENER EL SERVICIO DE LA GARANTÍA

A pesar de no ser necesario para el servicio de garantía, le solicitamos que registre su unidad para el lavado a presión. Para ello, llene la tarjeta de registro y envíela a vuelta de correo. Para obtener el servicio de LANDA de la garantía, debe hacer llegar el producto a un Distribuidor de LANDA autorizado, con flete prepago, acompañado del comprobante de la compra, dentro del período prescrito por la garantía. En caso de que el producto esté instalado de forma permanente, deberá notificar el defecto a su Distribuidor Autorizado de LANDA. El distribuidor Autorizado de LANDA presentará un reclamo a Landa la cual deberá verificar el defecto. En la mayoría de los casos, deberá enviar la parte a LANDA con flete prepago junto con el reclamo. Para el servicio de la garantía de los componentes garantizados por otros fabricantes, su Distribuidor Autorizado de LANDA le ayudará a obtener el servicio que necesite de estos fabricantes por medio de sus centros locales de servicio autorizado. En caso de que no pueda resolver su reclamo de la garantía satisfactoriamente, envíe una carta a LANDA, 4275 N.W. Pacific Rim Blvd., Camas, WA 98607, ATT: Warranty Dept. (Departamento de Garantías) explicando la naturaleza del defecto, el nombre del Distribuidor Autorizado de LANDA junto con una copia de la factura de compra.

LIMITACIÓN DE LA RESPONSABILIDAD

LANDA especificamente renuncia a la responsabilidad de todo daño y perjuicio especial, incidental, o consecuencial. La responsabilidad de LANDA con respecto a todo reclamo de cualquier índole, no superará, bajo circunstancia alguna, el precio de compra del producto en cuestión. LANDA ha puesto todo su empeño para asegurarse de que las ilustraciones y especificaciones son las que corresponden; no obstante, estas no implican la garantía de comerciabilidad o de aptitud para un fin en particular o que el producto sea un fiel reflejo de las ilustraciones y especificaciones._**LA GARANTÍA CONTENIDA EN LA PRESENTE REEMPLAZA A CUALQUIER OTRA GARANTÍA, SEA EXPRESA, IMPLÍCITA, INCLUSO TODA GARANTÍA IMPLÍCITADE APTITUD PARA UN FIN EN PARTICULAR. LANDA** no autoriza a terceros, incluso a los Distribuidores Autorizados de LANDA , a efectuar manifestación o promesa alguna en nombre de LANDA ni a modificar los términos, condiciones o limitaciones en modo alguno. Es responsabilidad del Comprador asegurarse de que la instalación y el uso de los productos LANDA se realice de acuerdo con los códigos locales. Bien que Landa intenta asegurarse de que sus productos cumplan con los códigos nacionales, no se responsabiliza por el procedimiento de utilización del producto ni por su instalación por parte del Comprador.

LANDA®
WATER CLEANING SYSTEMS

4275 NW Pacific Rim Blvd • Camas, WA 98607 • USA
Form #96-602 • Revised 5/00 • Printed in U.S.A. for Landa, Inc., Camas, WA, USA